The Data Link Layer

Reading: Ch. 2.2, 2.6, 3.1, 3.2

Goals for Today's Class

- Multiple-Access (Broadcast) Networks
  - Ethernet
- Network Connecting Devices
  - Repeaters and hubs
  - Bridges / LAN switches
  - Routers
- Network Categories
  - DAN, LAN, MAN, WAN

Message, Segment, Packet, and Frame

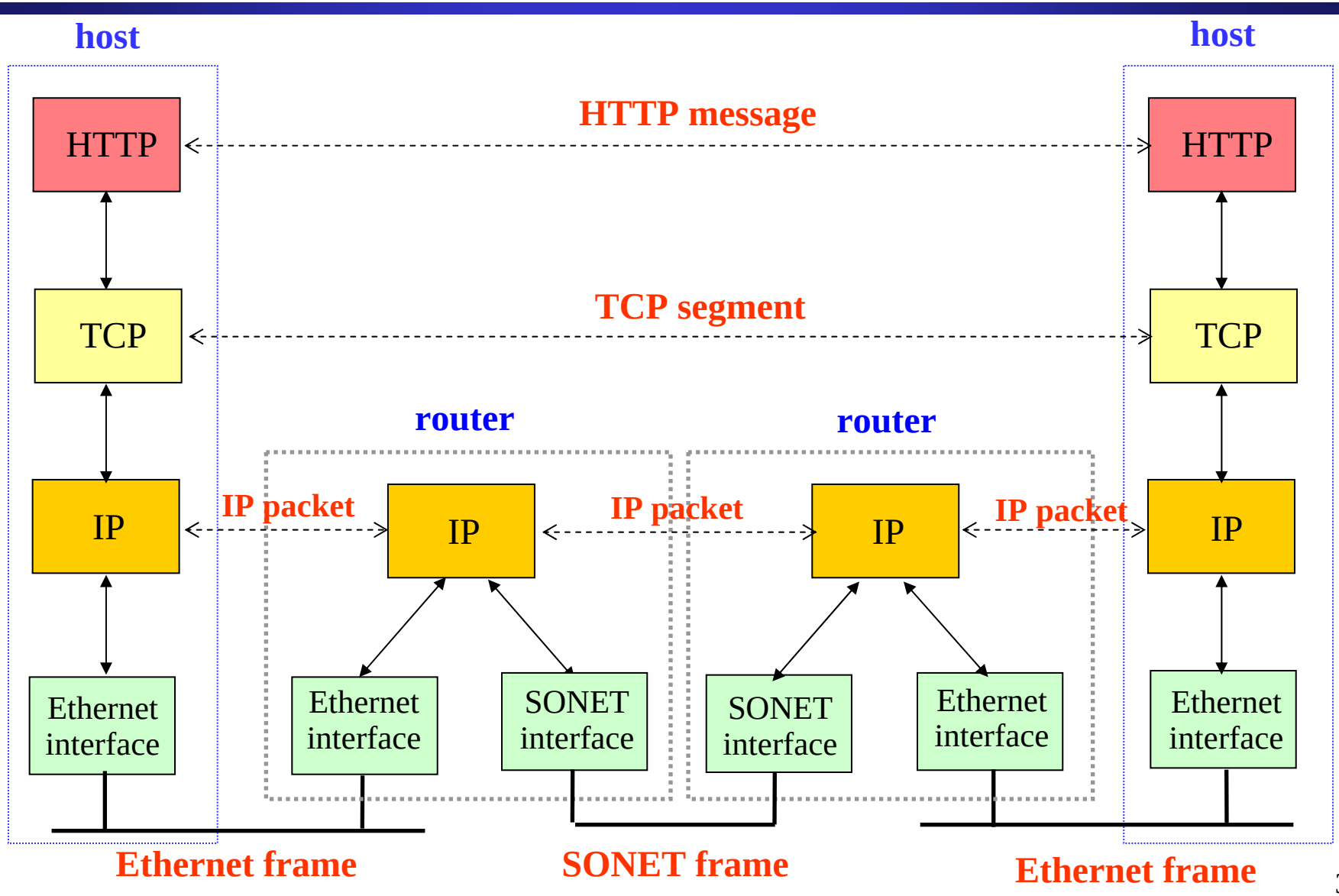

Context

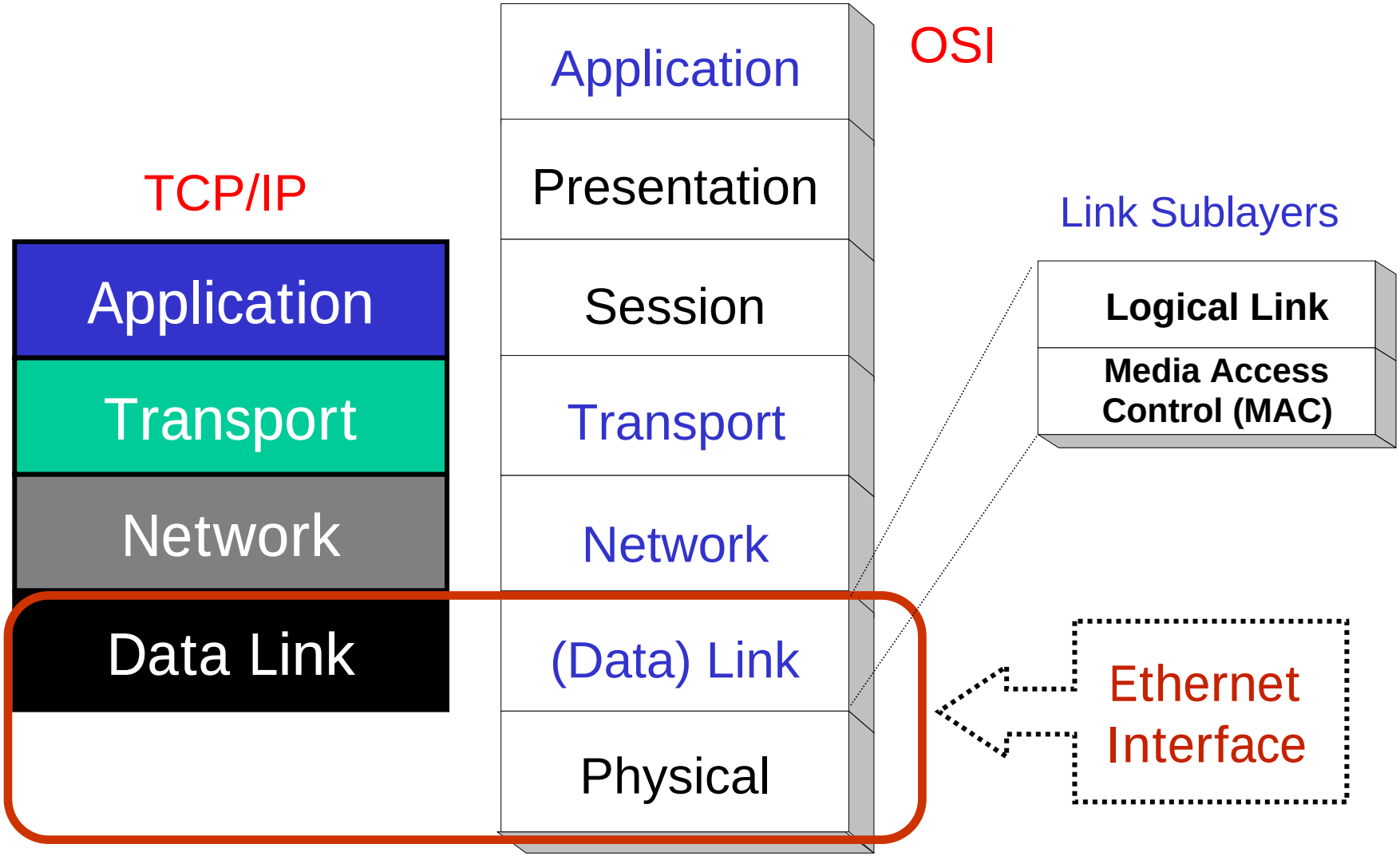
TCP/IP
Application
Transport
Network
Data Link
Application
Presentation
Session
Transport
Network
(Data) Link
Physical
OSI
Link Sublayers
Logical Link
Media Access Control (MAC)
Ethernet Interface

The Link Layer

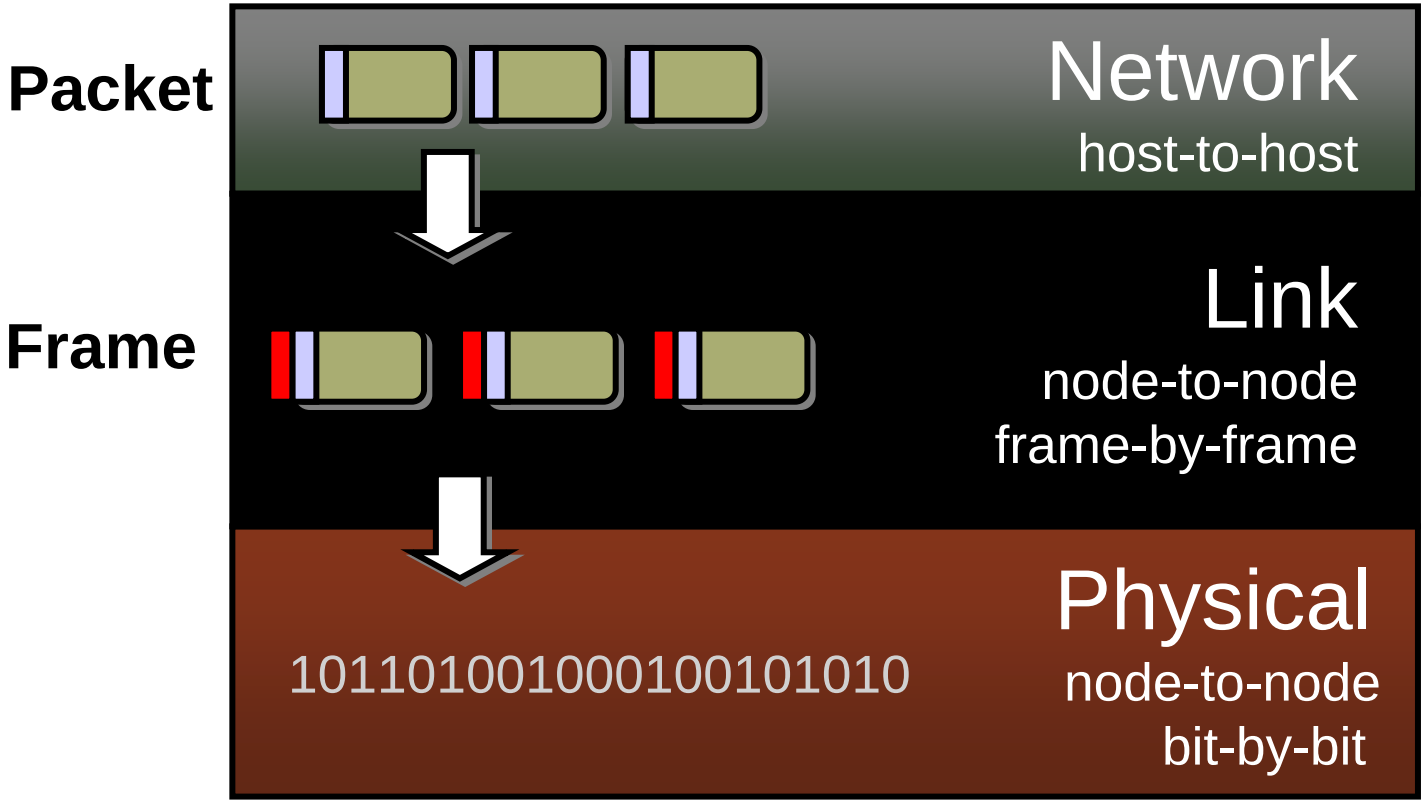

The link layer is responsible for frame-level node-to-node communication. Datagram from network layer is encapsulated into a link-layer frame for transmission over physical medium.

Simple Network: 2 Nodes and a Link

- Link: physical medium connecting nodes
  - Twisted pair: the wire that connects to telephones
  - Coaxial cable: the wire that connects to TV sets
  - Optical fiber: high-bandwidth long-distance links
  - Space: propagation of radio waves, microwaves, …

Links: Delay and Bandwidth

- Delay
  - Latency for propagating data along the link
  - Corresponds to the “length” of the link
  - Typically measured in seconds
- Bandwidth
  - Amount of data sent (or received) per unit time
  - Corresponds to the “width” of the link
  - Typically measured in bits per second

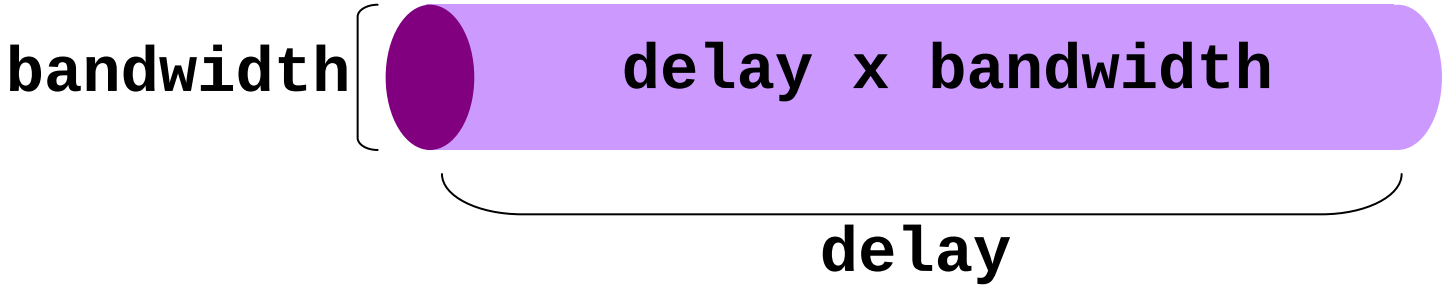

Connecting More Than Two Nodes

- Multi-access link: Ethernet
  - Single physical link, shared by multiple nodes
- Point-to-point links: fiber-optic cable
  - Separate link per pair of nodes
  - Limitations on the number of adapters per node

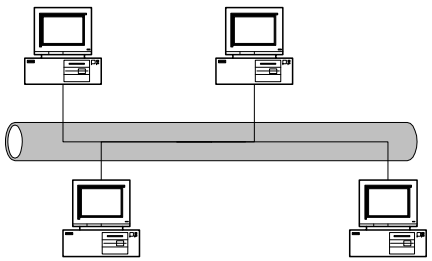

multi-access link (broadcast network)

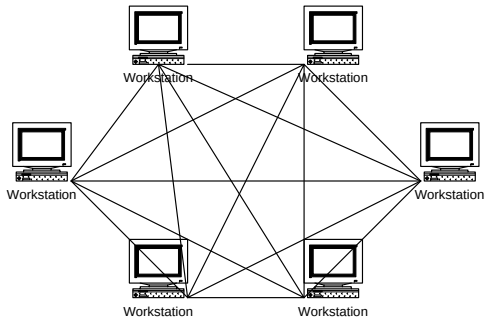

point-to-point links

Broadcast Networks (1)

- Bus topology

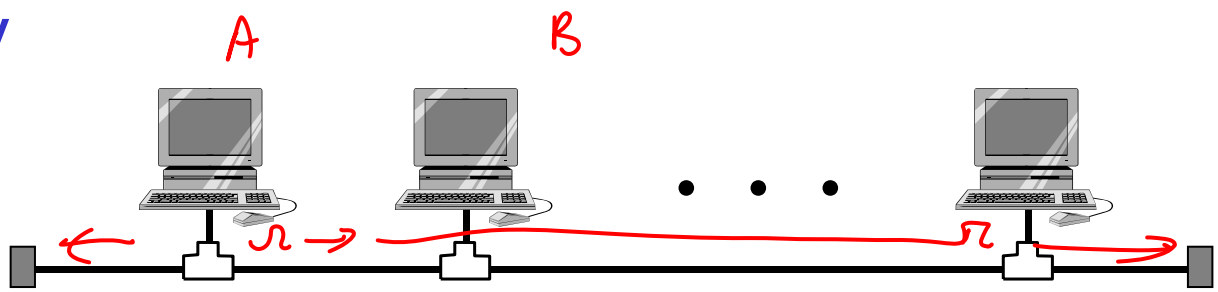

- Ethernet cable:

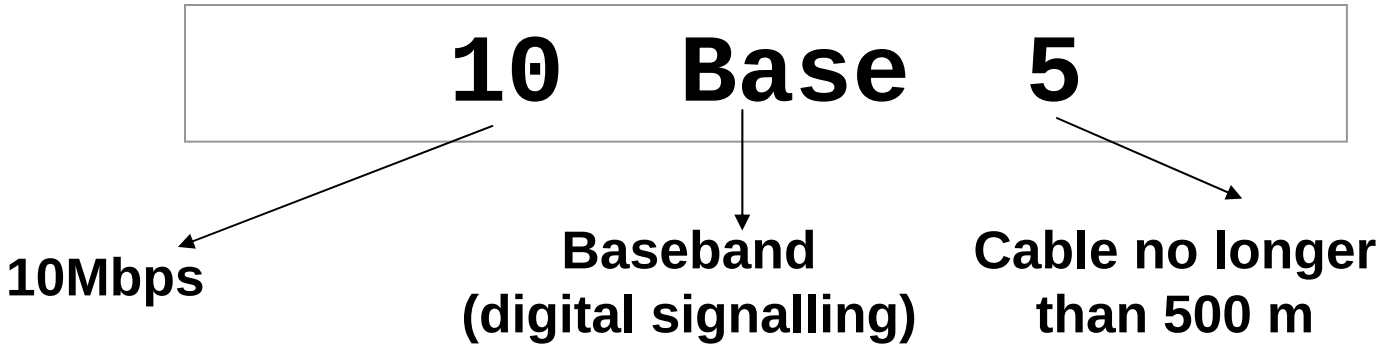

- All nodes share use of link, compete for access

Broadcast Networks (2)

- Star topology

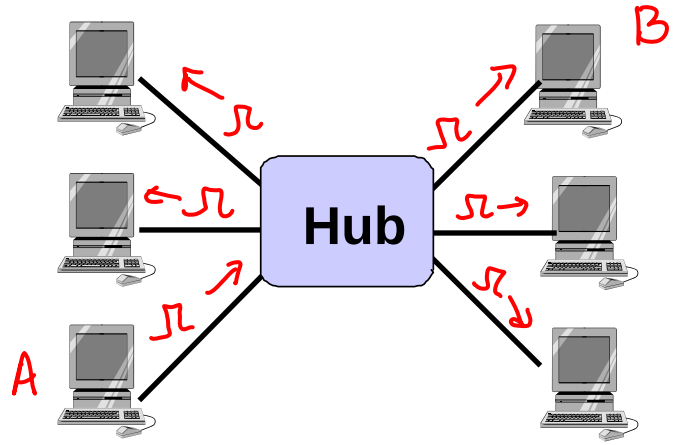

- Ethernet cable:

100 Base T

100Mbps

Baseband (digital signalling)

Twisted Pairs

- The hub replicates the signal along all links, except the one the signal comes from

Broadcast Networks (2)

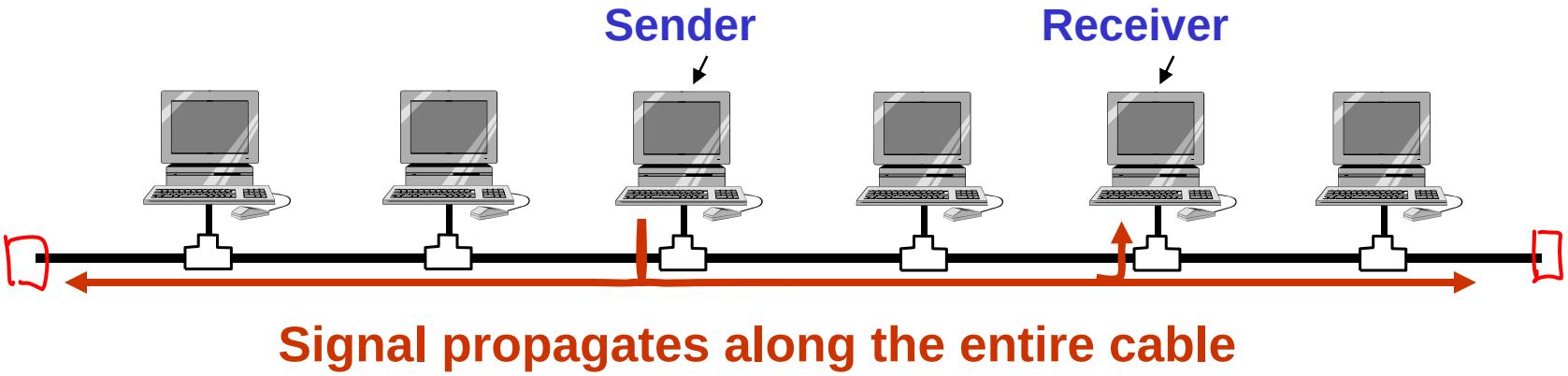

- Broadcast medium
  - All stations receive a copy of the message sent
  - But most communication is intended to be only between **two** computers on a network
- To allow sender to specify destination, each station is assigned a hardware address (MAC address)

Broadcast Networks (3)

- Example: Ethernet Addressing
  - Unique 48-bit MAC address
  - First 24 bits is manufacturer code - assigned by IEEE
  - Second 24 bits are sequentially assigned and UNIQUE

- MAC address must be **unique**

Broadcast Networks (4)

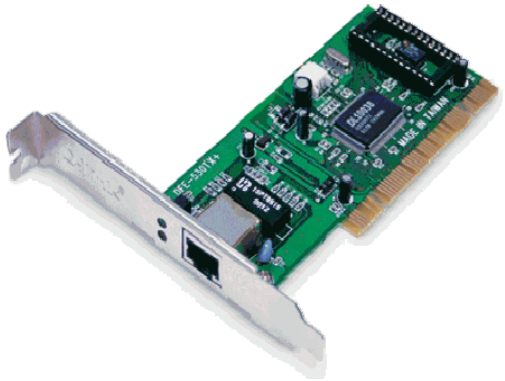

- Where is the MAC address stored ?
  - On the Network Interface Card (NIC)
  - When NIC is manufactured
- What is NIC ?
  - Special-purpose hardware that handles all the details of packet transmission and reception
  - It operates independently of the CPU
  - Compares the destination MAC address on each incoming packet to the MAC address of its own station and discards frames not destined for the station
- Interface hardware, not software, checks address

NIC

- Also called link-layer adapter

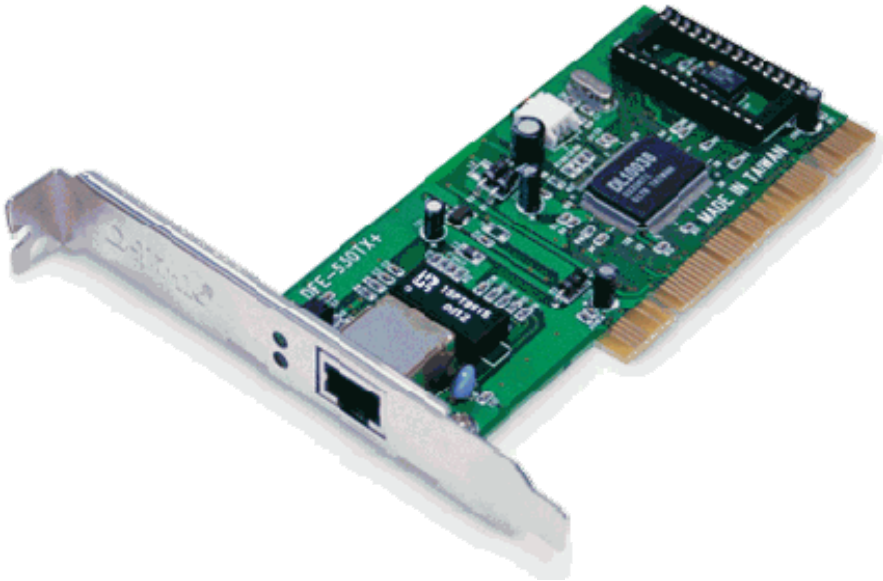

- The link layer is implemented in hardware in the form of an adapter. The adapter can decide to discard frames in error without notifying the OS.

Ethernet (802.3)

Ethernet

- Is the dominating LAN technology
- IEEE 802.3 defines Ethernet
- Layers specified by 802.3:
  - Ethernet Physical Layer
  - Ethernet Medium Access (MAC) Sublayer

Ethernet Physical Layer

- Minimal Bus Configuration

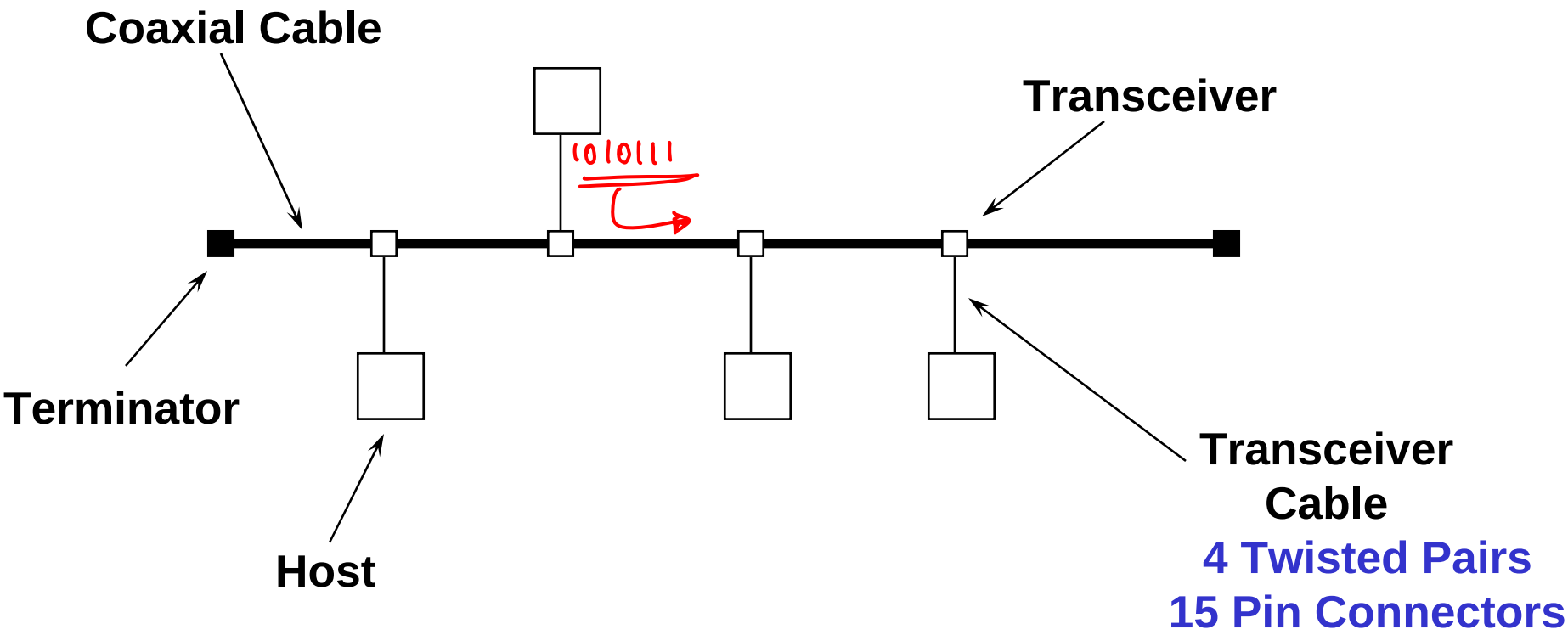

Channel Logic

Manchester Phase Encoding

Star Topology

- Physically star, logically bus

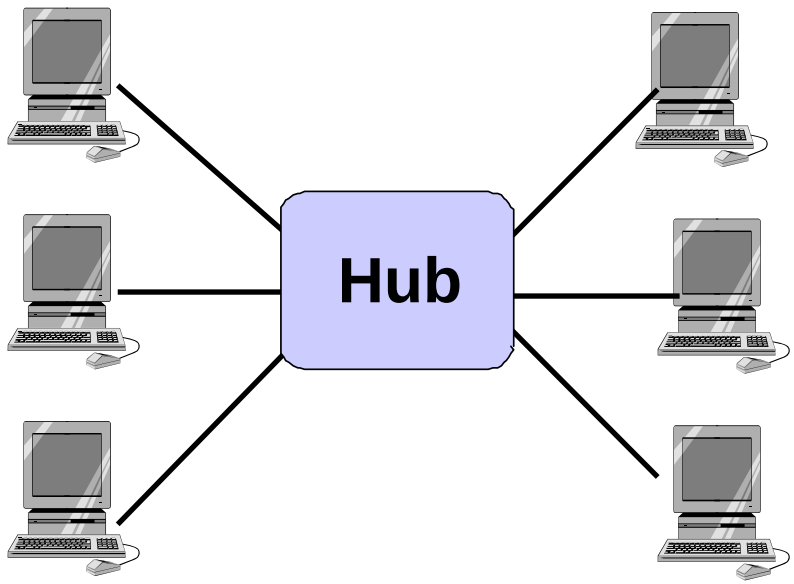

Ethernet Physical Layer

- Typical Large-Scale Configuration

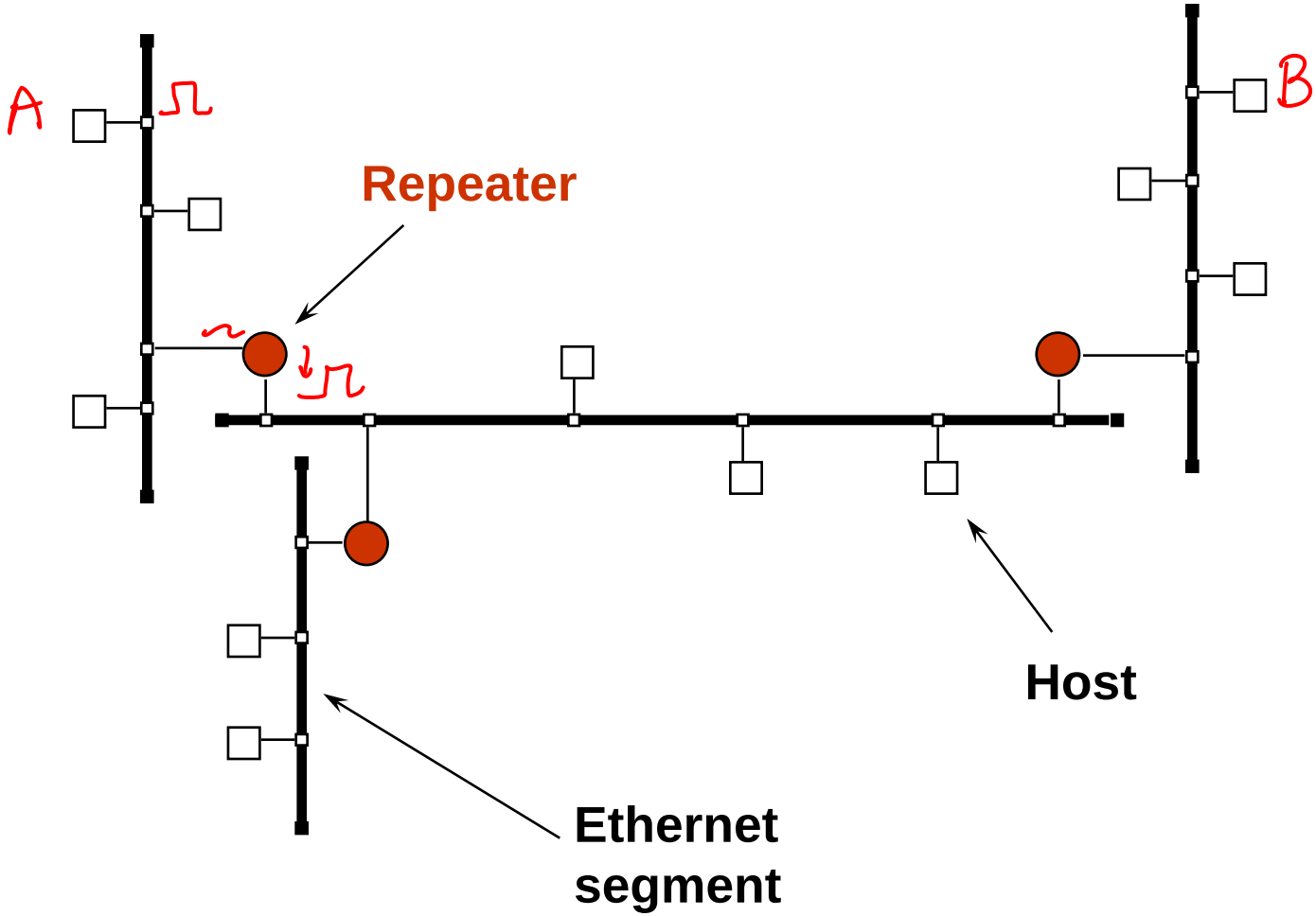

Ethernet Physical Restrictions

- For thick coaxial cable (10Base 5)
  - Segments of 500 meters maximum
  - Maximum of 4 repeaters in any path
  - Maximum of 100 transceivers per segment
  - Transceivers placed only at 2.5 meter marks on cable

Manchester Encoding

Data stream 1 0 1 1 0 0

Encoded bit pattern

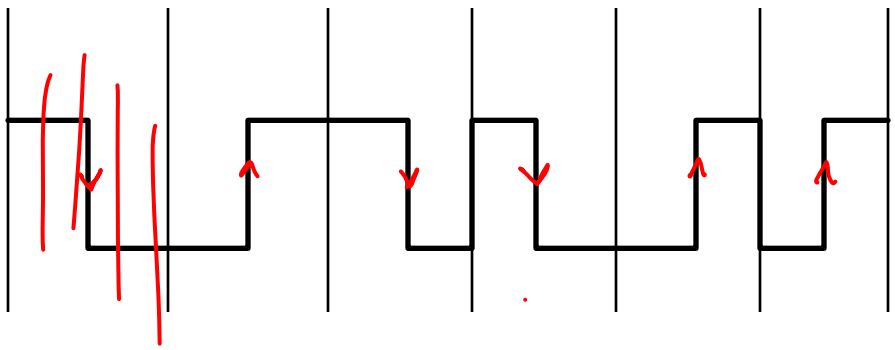

- 1 bit = high/low voltage signal
- 0 bit = low/high voltage signal

Ethernet: MAC Layer

- Data encapsulation
  - Frame Format
  - Addressing
  - Error Detection
- Access to the medium
  - CSMA/CD
  - Backoff Algorithm

Ethernet: Frame Format

Network
LLC

min(46), max(1500)

Preamble: 8 bytes used to synchronize the adapter
MAC address: 6 bytes (90:AF:F4:CA:BA:03)
Type: 2 bytes
CRC: 4 bytes
(Cyclic Redundancy Check)

Ethernet frames must carry at least 46 bytes and at most 1500 bytes of data (not including the 18 bytes of header & trailer).

Ethernet – Questions:

Q1: An Ethernet MAC sublayer receives 42 bytes of data from the LLC sublayer. How many bytes of padding must be added to the data?

4 (min = 46)

Q2: An Ethernet MAC sublayer receives 1510 bytes of data from the LLC sublayer. Can the data be encapsulated in one frame? If not, how many frames need to be sent ? What is the size of the data in each frame ?

2

1500 bytes 1st

10 bytes 2nd

(max = 1500)

Ethernet: MAC Layer

- Data encapsulation
  - Frame Format
  - Addressing
  - Error Detection
- Access to the medium
  - CSMA/CD
  - Backoff Algorithm

Ethernet Addressing

$$\underbrace{00\text{-}00\text{-}1D}_{\text{Manufacturer ID}}\text{-}\underbrace{00\text{-}26\text{-}A3}_{\text{Sequential Address}}$$

- Broadcast address:

FF-FF-FF-FF-FF-FF

Question

- MAC addresses only have significance within the context of a local-area network. So, why are MAC addresses globally unique?

Ethernet: MAC Layer

- Data encapsulation
  - Frame Format
  - Addressing
  - Error Detection
- Access to the medium
  - CSMA/CD
  - Backoff Algorithm

Ethernet: Medium Access

- When more than one nodes share a medium, we need a protocol to coordinate access to the medium.
- Ethernet uses CSMA/CD.

  CS → Carrier Sense

  MA → Multiple Access

  CD → Collision Detection

Medium Access Protocols

- CSMA
  - 1-Persistent CSMA
  - Non-Persistent CSMA
  - p-Persistent CSMA
- CSMA/CD

- Idea:
  - Listen to the channel before transmitting a packet.

1-Persistent CSMA

- Sense the channel.
  - If busy, keep listening to the channel and transmit immediately when the channel becomes idle.
  - If idle, transmit a packet immediately.
- If collision occurs,
  - Wait a random amount of time and start over again.

The protocol is called 1-persistent because the host transmits with a probability of 1 whenever it finds the channel idle.

The Effect of Propagation Delay on CSMA

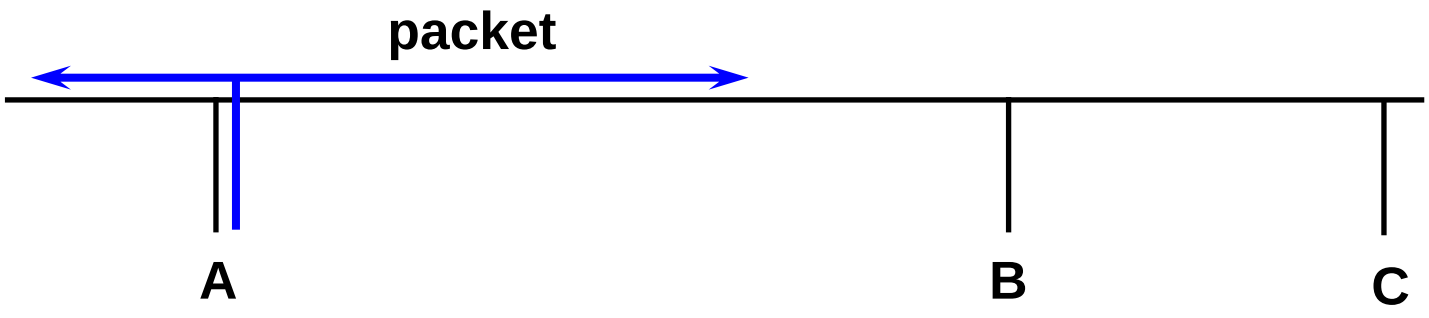

carrier sense = idle

↓

Transmit a packet

↓

Collision

1-Persistent CSMA *(cont'd)*

- Even if prop. delay is zero, there could be collisions

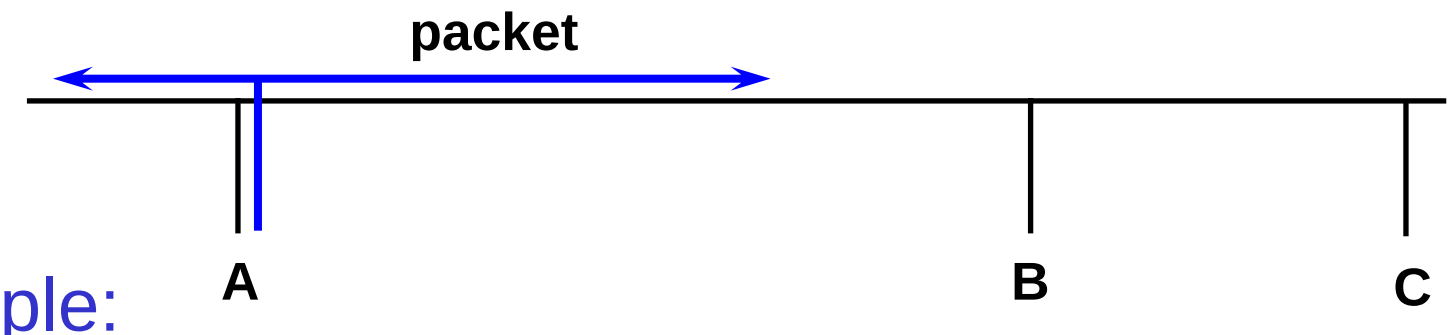

- Example:
  - If stations B and C become ready in the middle of A's transmission, B and C will wait until the end of A's transmission and then both will begin transmitted simultaneously, resulting in a collision.

- If B and C were not so greedy, there would be fewer collisions

Non-Persistent CSMA

- Sense the channel.
  - If busy, wait a random amount of time and sense the channel again
  - If idle, transmit a ~~packet~~ frame immediately (the entire frame gets transmitted)
- If collision occurs
  - wait a random amount of time and start over again

WASTED time in case of collissions

1- Persistent vs. Non-Persistent CSMA

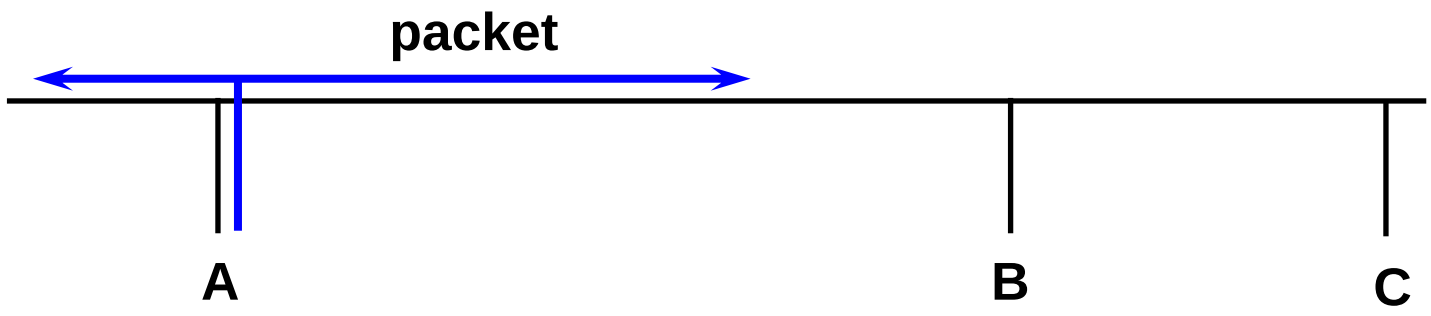

- If B and C become ready in the middle of A's transmission,
  - 1-Persistent: B and C collide → INEFFICIENT
  - Non-Persistent: B and C probably do not collide
- If only B becomes ready in the middle of A's transmission,
  - 1-Persistent: B succeeds as soon as A ends
  - Non-Persistent: B may have to wait → INEFFICIENT

$\in (0,1)$

Optimal Strategy: p-Persistent CSMA

1. Sense the channel
   - If channel is idle, transmit a packet with probability p
     - if a packet was transmitted, go to step 2
     - if a packet was not transmitted, wait one slot and go to step 1
   - If channel is busy, wait one slot and go to step 1.
2. Detect collisions
   - If a collision occurs, wait a random amount of time and go to step 1

One slot = contention period

(i.e., one round trip propagation delay)

p-Persistent CSMA *(cont'd)*

- Consider p-persistent CSMA with p=0.5
  - When a host senses an idle channel, it will only send a packet with 50% probability
  - If it does not send, it tries again in the next slot.

CSMA/CD

- In CSMA protocols
  - If two stations begin transmitting at the same time, each will transmit its complete packet, thus wasting the channel for an entire packet time
- In CSMA/CD protocols
  - The transmission is terminated immediately upon the detection of a collision
  - CD = Collision Detect

CSMA/CD

- Sense the channel
  - If idle, transmit immediately
  - If busy, wait until the channel becomes idle
- Collision detection
  - Abort a transmission immediately if a collision is detected
  - Try again later according to a backoff algorithm

random amount of time

Collision detection time

How long does it take to realize there has been a collision?

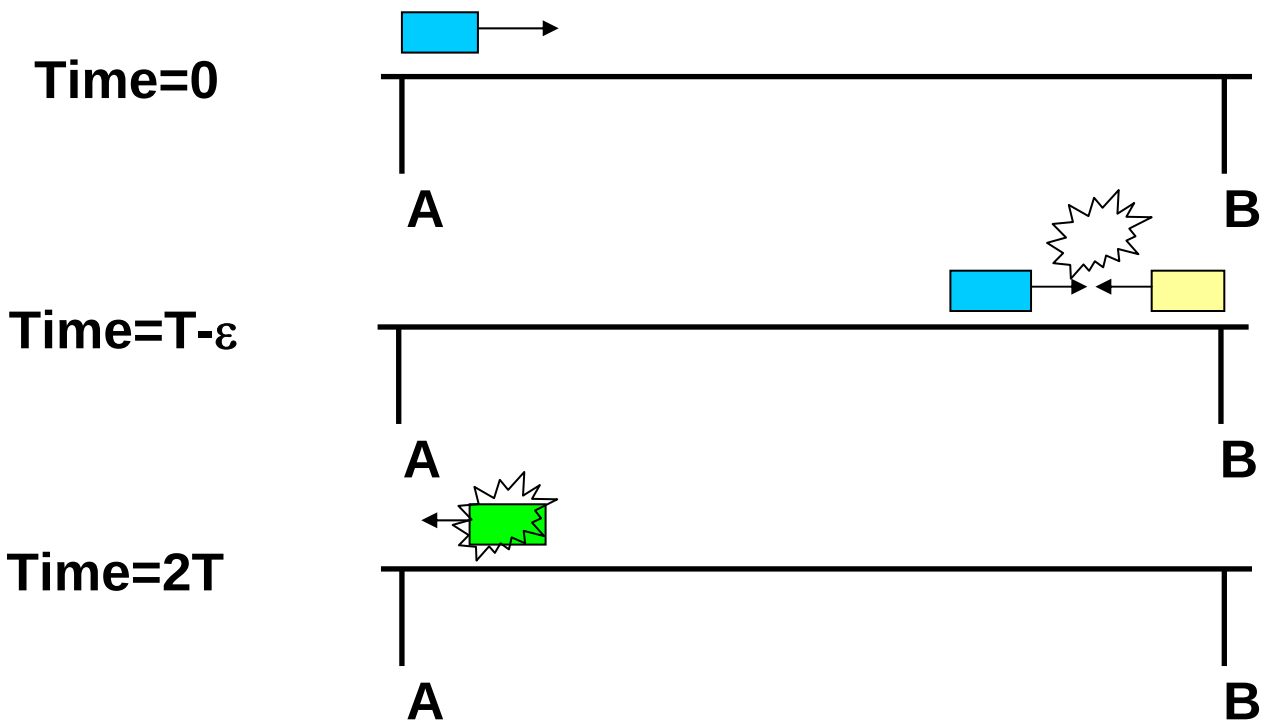

T = end-to-end propagation delay

Worst case: 2 x T

To detect the collision, A must transmit for at least 2xT time.

Ethernet: MAC Layer

- Data encapsulation
  - Frame Format
  - Addressing
  - Error Detection
- Access to the medium
  - CSMA/CD
  - Backoff Algorithm

Ethernet Backoff Algorithm

- Binary Exponential Backoff:
  - If collision choose one slot randomly from 2^k slots, where k is the number of collisions the frame has suffered.

slot length = 2 x end-to-end delay

  - This algorithm can adapt to changes in network load.

Binary Exponential Backoff

slot length = 2 x end-to-end delay = 50 μs

during the time slot starting at ∅

t=0μs: Assume A and B collide ($k_A = k_B = 1$)

t=50 backoff

A, B choose randomly from 2^1 slots: [0,1]

Assume A chooses 1, B chooses 1

t=100μs: A and B collide ($k_A = k_B = 2$)

150 backoff

A, B choose randomly from 2^2 slots: [0,3]

Assume A chooses 2, B chooses 0

t=150μs: B transmits successfully

t=250μs: A transmits successfully

Binary Exponential Backoff

- Binary exponential backoff will allow a maximum of 15 retransmission attempts

$[0, 2^{15}-1]$

- If 16 backoffs occur, the transmission of the frame is considered a failure.

State Diagram for CSMA/CD

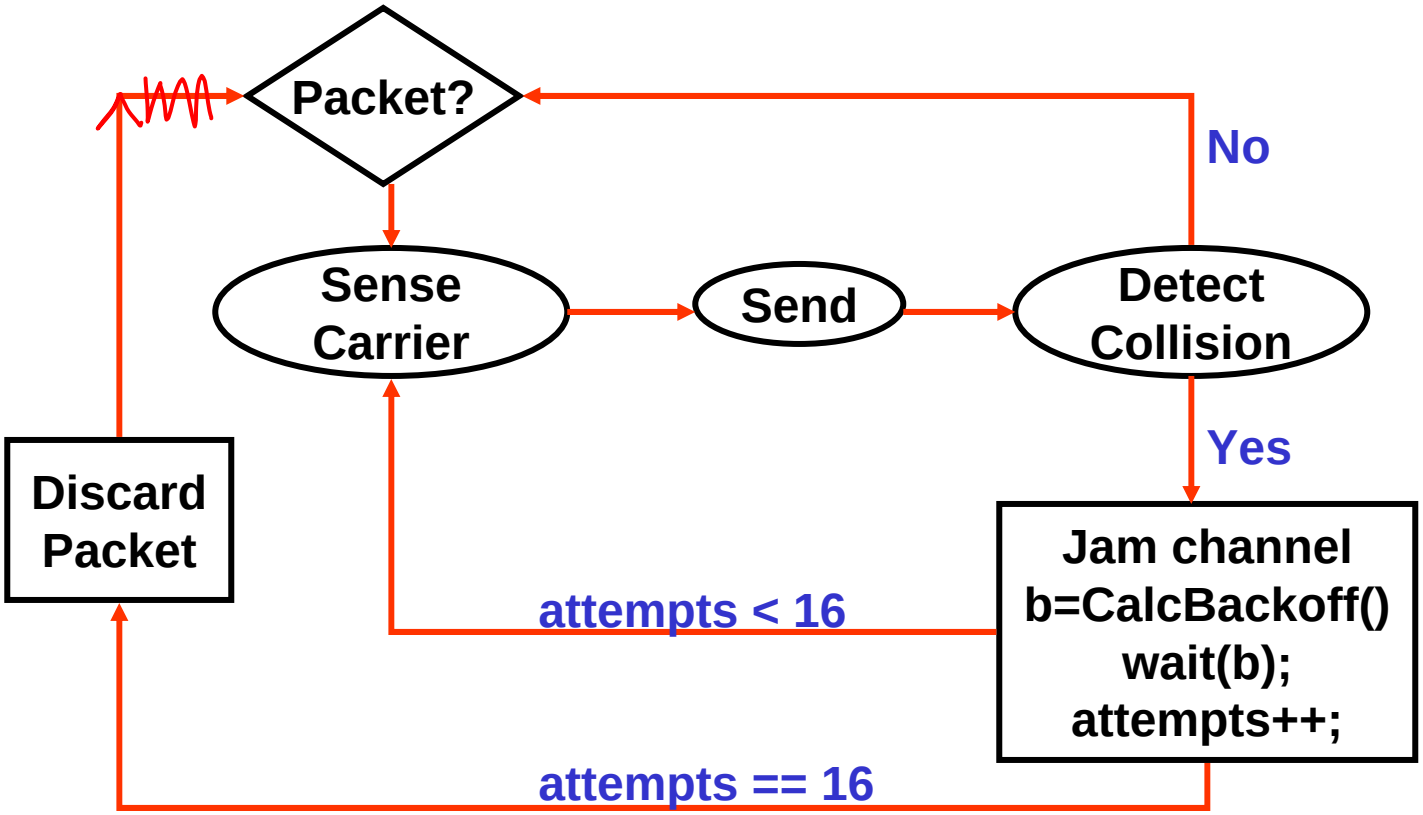

Ethernet – Collision Detection

Ether seg ≤ 500 m
repeaters ≤ 4

- IEEE 802.3 specifies max value of 2T to be 51.2μs
  - This relates to maximum distance of 2500m between hosts
  - At 10Mbps it takes 0.1μs to transmit one bit so 512 bits (64B) take 51.2μs to send

$10 \cdot 10^6$ bits sent in 1 s

1 bit → $\frac{1s}{10 \cdot 10^6}$

- Condition for CSMA/CD to work:

$$\boxed{\text{Transmission Time} > 2T}$$

  - So, Ethernet frames must be at least 64B long
    - 14B header, 46B data, 4B CRC
    - Padding is used if data is less than 46B

CSMA/CD – Question 1

Consider a 10Mb/s CSMA/CD network as shown below:

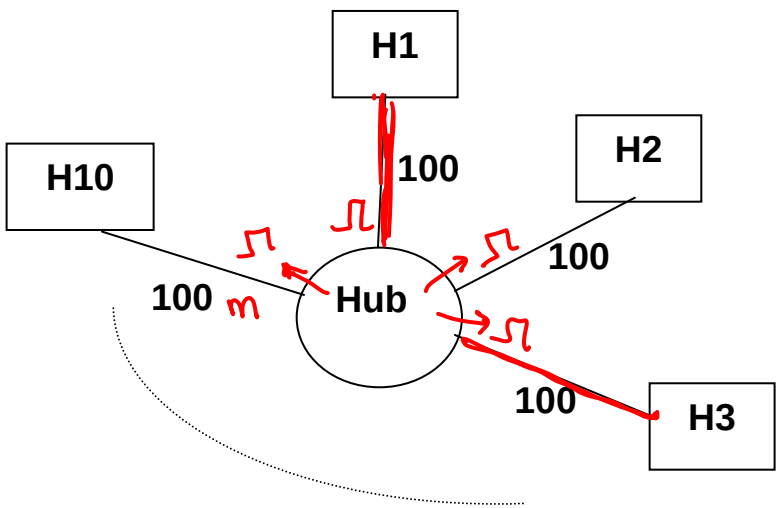

Cond : $\boxed{\text{Transmission Time} \geq 2 \times \text{Delay}}$

$H_1 \rightarrow H_3$

L = Max wire length = 200 m

S = Speed = $2 * 10^8$ m/s

$$\text{Delay} = \frac{L}{S} = \frac{200}{200 * 10^6} = 10^{-6}\,s = 1\mu s$$

$$\text{Transm. Time} = \boxed{\frac{\text{Length of Packet}}{BW} = \frac{P}{10^7}}$$

$$\frac{P}{10^7} \geq 9 * 10^{-6} * 2$$

$P \geq 20$ bits $* 9 = 180$ bits

Calculate the length of the shortest packet that the network above can support so that the CSMA/CD protocol will function correctly. Assume that bits travel on the wire at the speed c = 2 * 10^8 m/s.

CSMA/CD – Question 2

The hub is now removed, but the computers remain in the same locations. A single cable is strung between the computers as shown below.

BW = 10 Mbps (bandwidth)

$c = 2 \times 10^8$ m/s

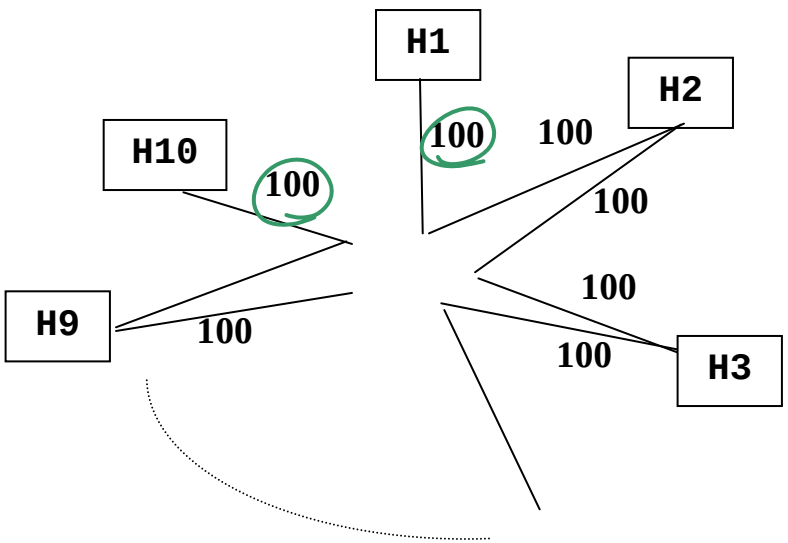

P = 800 bits

$L = 200 + 200 * 8 = 1800$ ← 9

compare to 200

P = 3600

What is the length of a shortest packet in this case?

CSMA/CD – Question 3

- Why do Ethernet adaptors select a *random* back-off time before trying to transmit a frame following a collision? Why do they pick the random back-off time from a *larger range* after each collision?

Extending Networks with

Interconnecting Devices

Goals for Today's Class

- Multiple-Access (Broadcast) Networks
  - Ethernet
- Network Connecting Devices
  - Repeaters and hubs
  - Bridges / LAN switches
  - Routers
- Network Categories
  - DAN, LAN, MAN, WAN

Interconnecting Devices

- There are many different interconnecting devices.

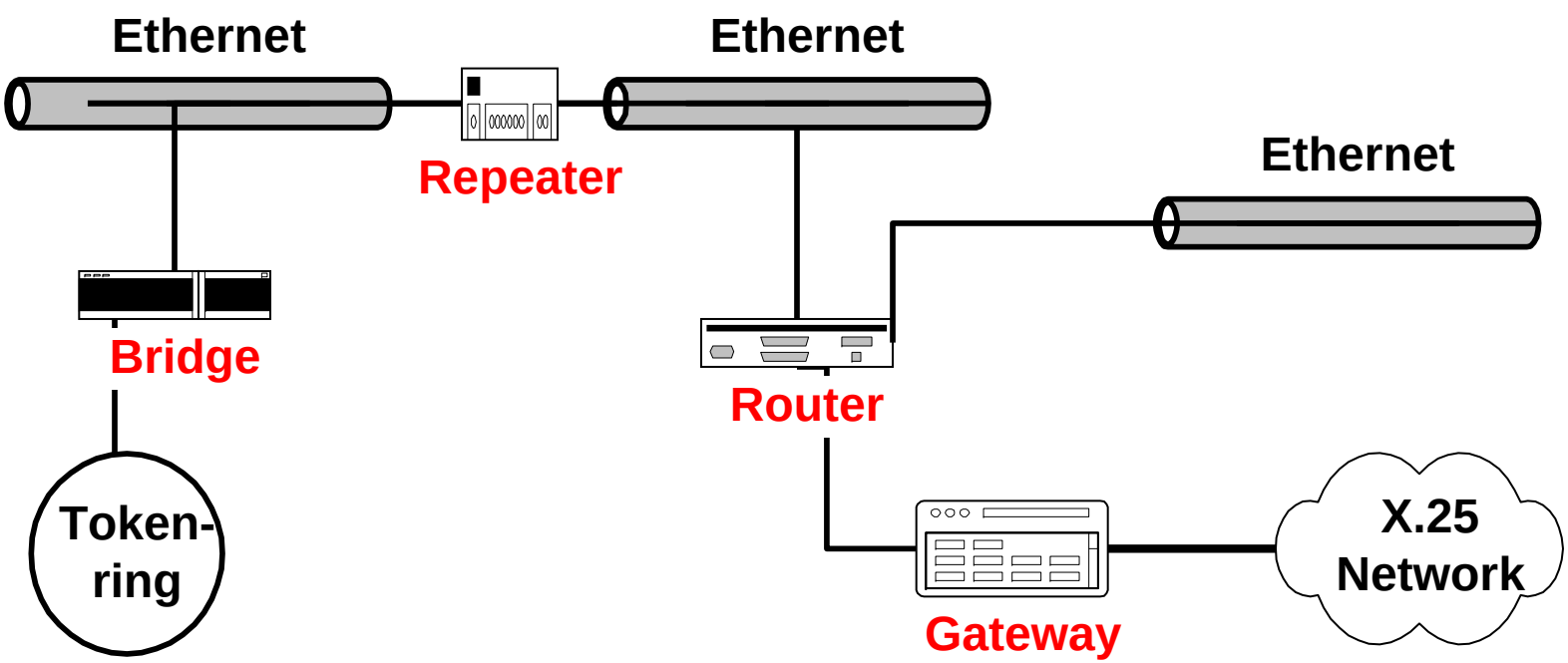

TCP/IP Suite and OSI Reference Model

- The TCP/IP protocol stack does not define the lower layers of a complete protocol stack
- The TCP/IP protocol stacks interfaces with the data link layer and the MAC sublayer

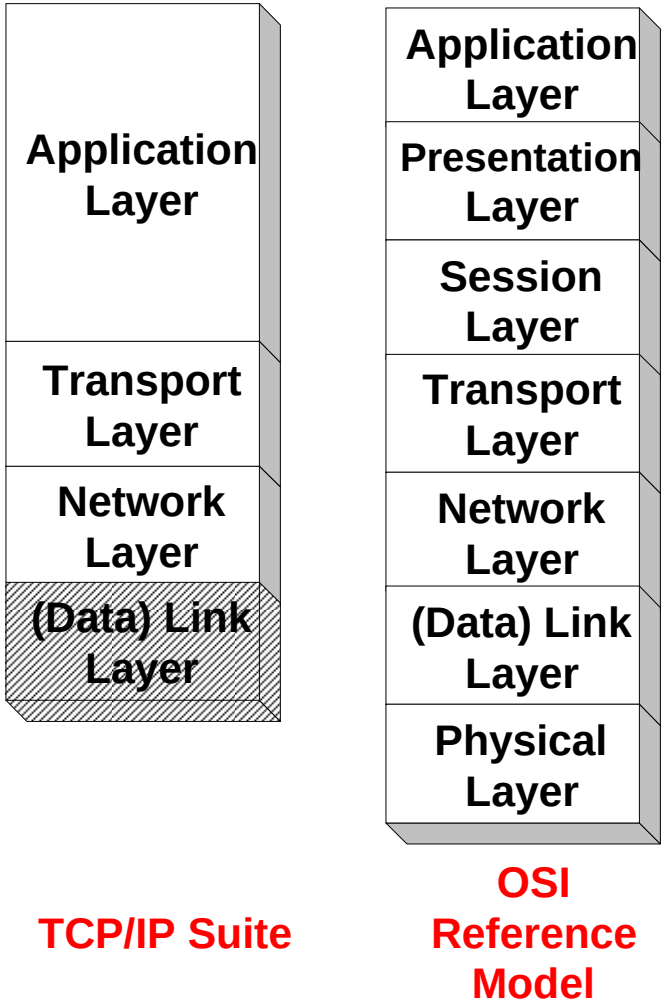

Shuttling Data at Different Layers

- Different devices switch different things
  - Network layer: packets (routers)
  - Link layer: frames (bridges and switches)
  - Physical layer: electrical signals (repeaters and hubs)

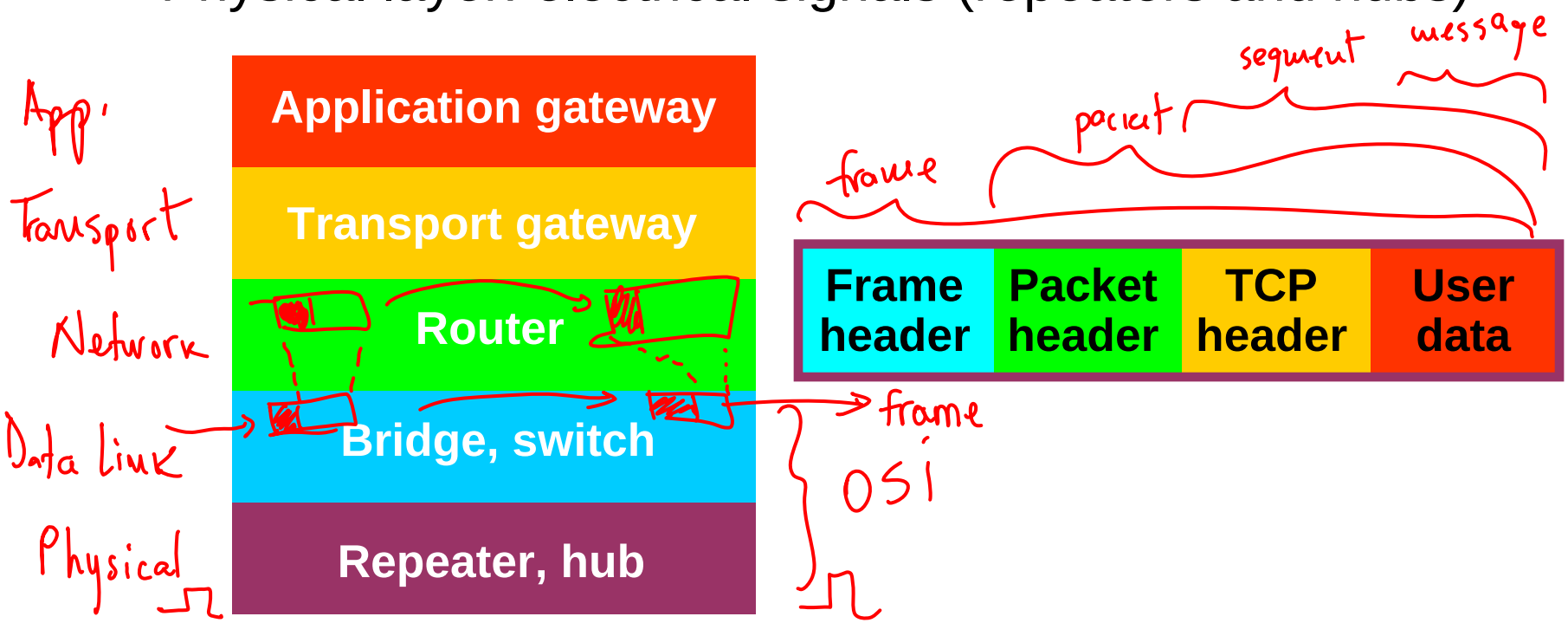

Physical Layer: Repeaters

- Copy / Amplify signals between the two segments
- Propagate valid signals as well as collisions
- Do not have hardware (MAC) addresses

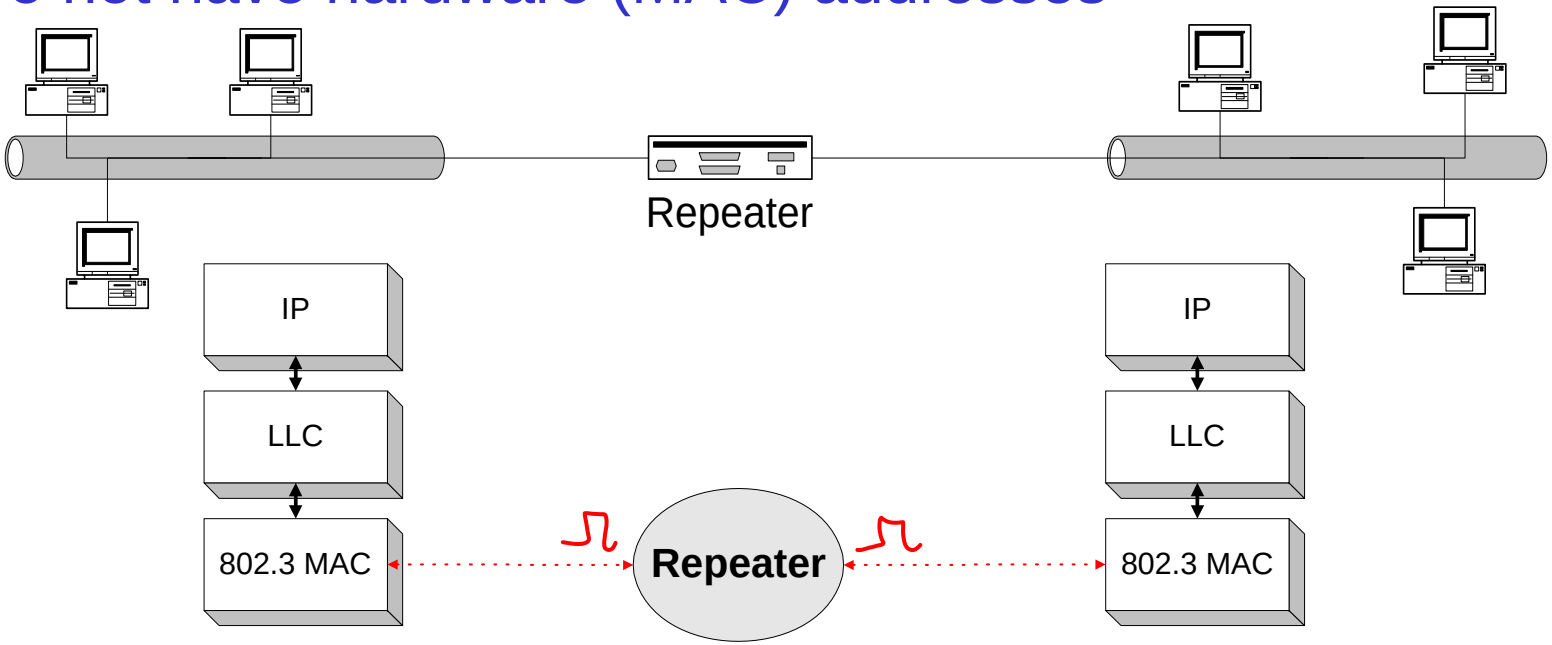

- Ethernet networks allow at most 4 repeaters between any 2 machines

Physical Layer: Hubs

- Joins multiple input lines electrically
  - Designed to hold multiple line cards

4, 5, 8, 9, 16,
32, 64 Ports

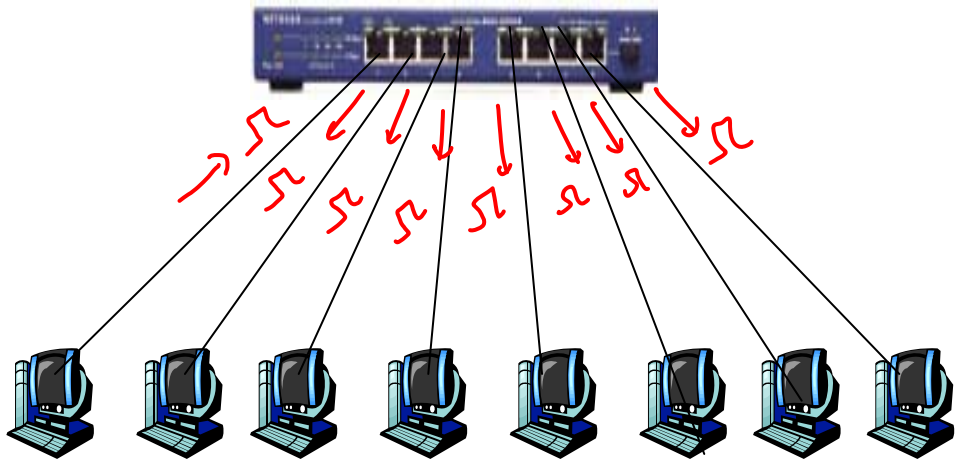

- Very similar to repeaters
  - Also operates at the physical layer
  - Passive hubs may simply forward signals
  - Active hubs may also amplify or refresh signals

Limitations of Repeaters and Hubs

- One large shared link
  - Each bit is sent everywhere
  - E.g., three departments each get 10 Mbps independently
  - … and then connect via a hub and must share 10 Mbps
- Cannot support multiple LAN technologies
  - Does not buffer or interpret frames
  - So, can't interconnect between different rates or formats
  - E.g., 10 Mbps Ethernet and 100 Mbps Ethernet
- Limitations on maximum nodes and distances
  - Shared medium imposes length limits
  - E.g., cannot go beyond 2500 meters on Ethernet

Goals for Today's Class

- Multiple-Access (Broadcast) Networks
  - Ethernet
- Network Connecting Devices
  - Repeaters and hubs
  - Bridges / LAN switches
  - Routers
- Network Categories
  - DAN, LAN, MAN, WAN

Link Layer: Bridges/LAN Switches

- Interconnect multiple LANs, possibly of different types.
- Operate on ~~packets~~ frames, not signals.
- Have one or more NICs

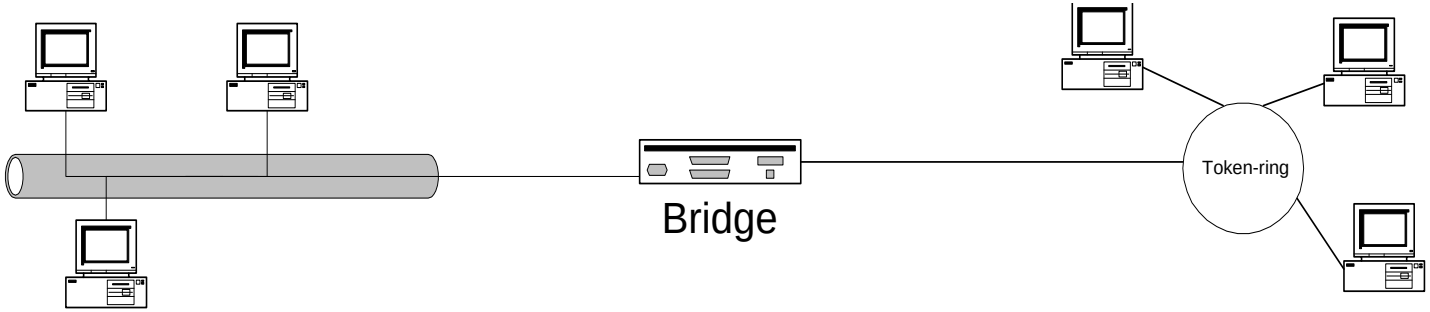

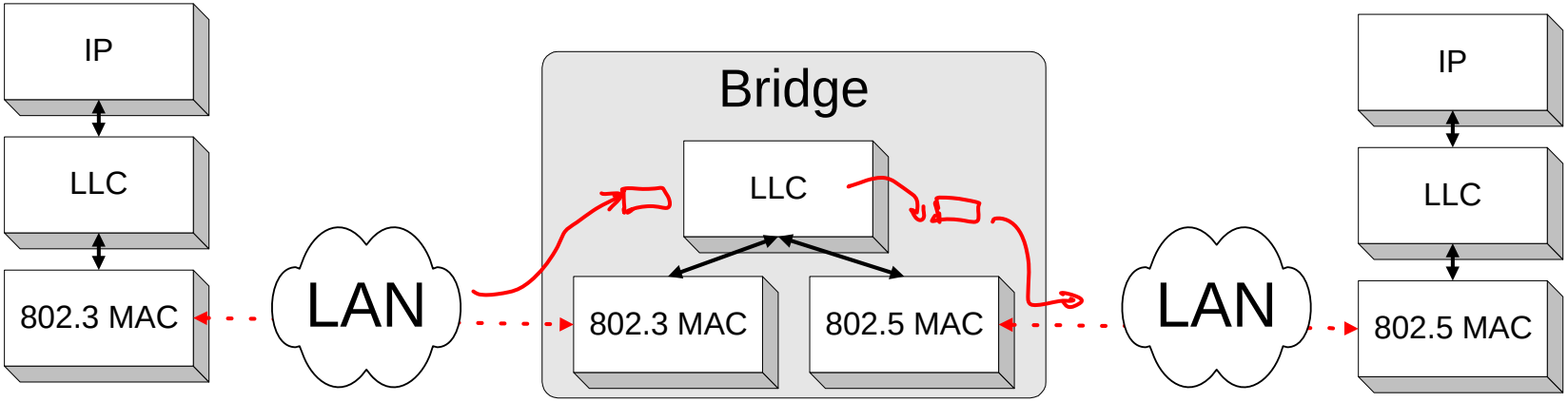

Bridges vs. LAN Switches

- A network switch is a computer networking device that connects network segments. The term commonly refers to a network bridge that processes and routes data at the Data link layer (layer 2) of the OSI model. One way to think of a layer 2 switch is as a multiport bridge.

- Switches that additionally process data at the Network layer (layer 3 and above) are often referred to as Layer 3 switches.

[Wikipedia]

http://en.wikipedia.org/wiki/Network_switch

Bridges vs. LAN Switches

- Layer 2 switching is highly efficient because there is no modification to the data packet, only to the frame encapsulation of the packet, and only when the data packet is passing through dissimilar media (such as from Ethernet to FDDI).

[Wikipedia]

http://en.wikipedia.org/wiki/LAN_switching

LAN Switches: Store and Forward

- Several packets may arrive for the same output link at the same time, therefore a switch must have buffers
- Uses a strategy called Store and Forward
  - At each switch the entire packet is received, stored briefly, and then forwarded to the next node

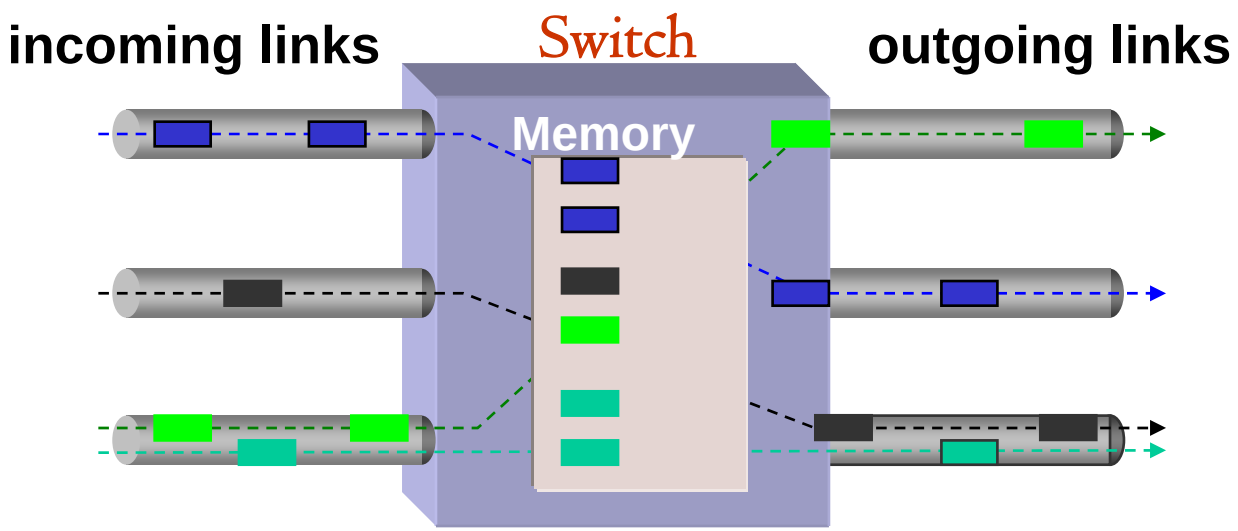

Hubs vs. LAN Switches

- With a hub, the bandwidth is shared among all workstations.
- When the hub is replaced with a switch, each sender and receiver pair has the full wire speed. Buffering of frames prevents collisions.

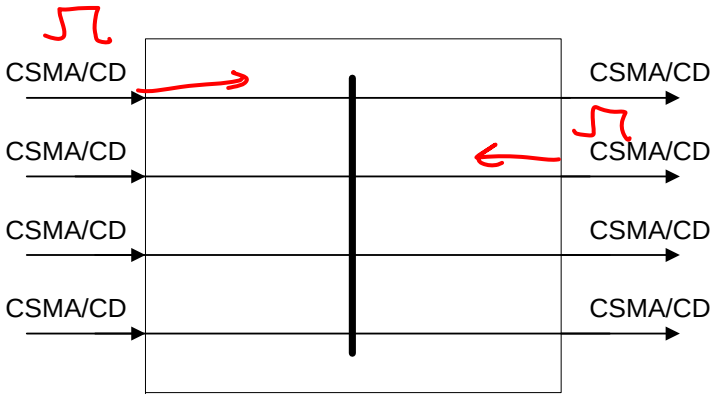

Hub

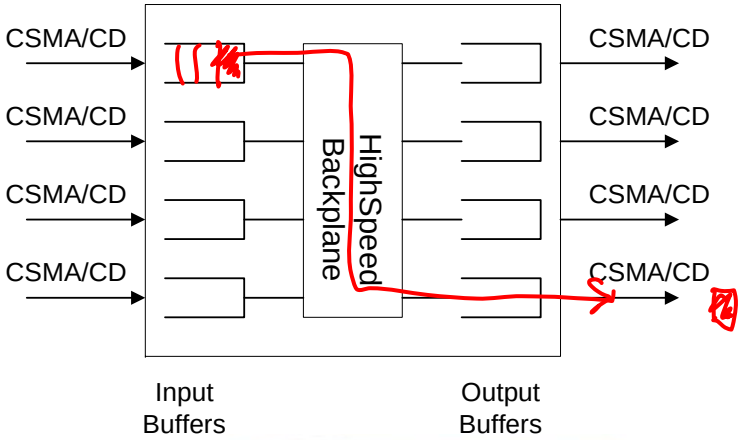

Switch

Link Layer: LAN Switches

- Network switches are increasingly replacing shared media hubs in order to increase bandwidth. For example, a 16-port 100BaseT hub shares the total 100 Mbps bandwidth with all 16 attached nodes. By replacing the hub with a switch, each sender/receiver pair has the full 100 Mbps capacity. Each port on the switch can give full bandwidth to a single server or client station or it can be connected to a hub with several stations.

[TechWeb Encyclopedia]

Hubs and Switches Used Together

- Hubs are used in combination with switches, because not all users may need the speed of an individual switching port.

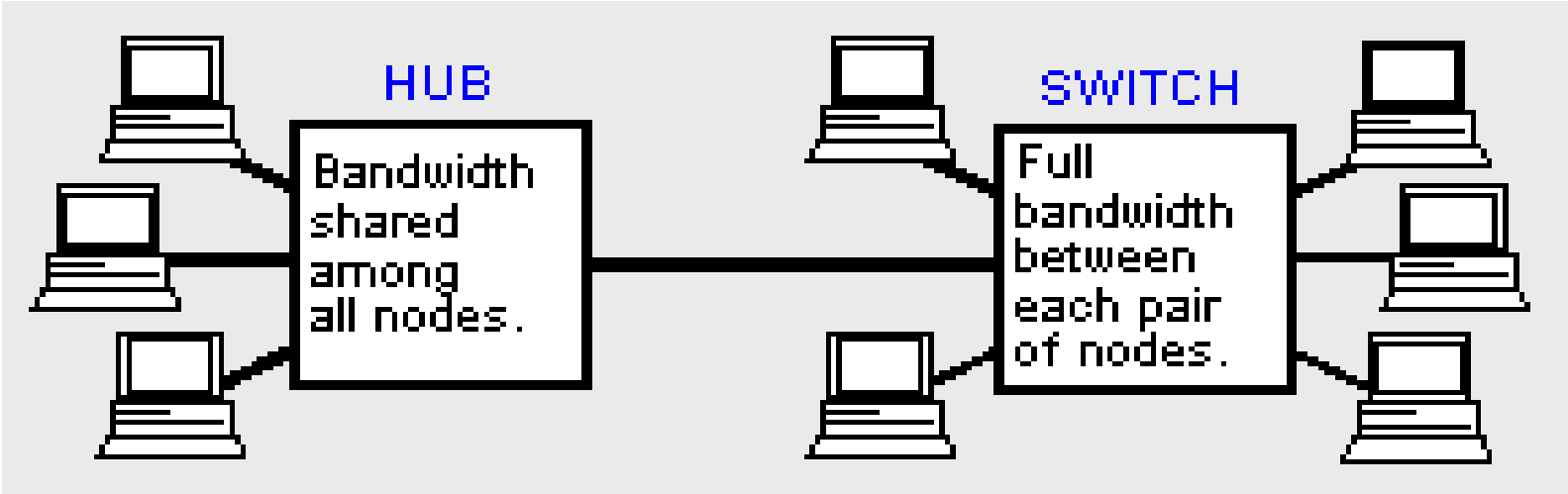

Bridge/LAN Switch Filtering

- Bridges learn from experience and build and maintain address tables of the nodes on the network.
  - Extract destination address from the frame
  - Look up the destination in a table
  - Forward the frame to the appropriate LAN segment

- More about this later …

Advantages Over Hubs/Repeaters

- Only forwards frames as needed
  - Filters frames to avoid unnecessary load on segments
  - Sends frames only to segments that need to see them
- Extends the geographic span of the network
  - Separate segments allow longer distances
- Improves privacy by limiting scope of frames
  - Hosts can “snoop” the traffic traversing their segment
  - … but not all the rest of the traffic
- Can join segments using different technologies

Disadvantages Over Hubs/Repeaters

- Delay in forwarding frames
  - Bridge/switch must receive and parse the frame
  - … and perform a look-up to decide where to forward
  - Storing and forwarding the packet introduces delay
  - Solution: cut-through switching
- Need to learn where to forward frames
  - Bridge/switch needs to construct a forwarding table
  - Ideally, without intervention from network administrators
  - Solution: self-learning
- Higher cost
  - More complicated devices that cost more money

Motivation For Cut-Through Switching

- Buffering a frame takes time
  - Suppose L is the length of the frame
  - And R is the transmission rate of the links
  - Then, receiving the frame takes L/R time units
- Buffering delay can be a high fraction of total delay
  - Propagation delay is small over short distances
  - Buffering delay may become a large fraction of total

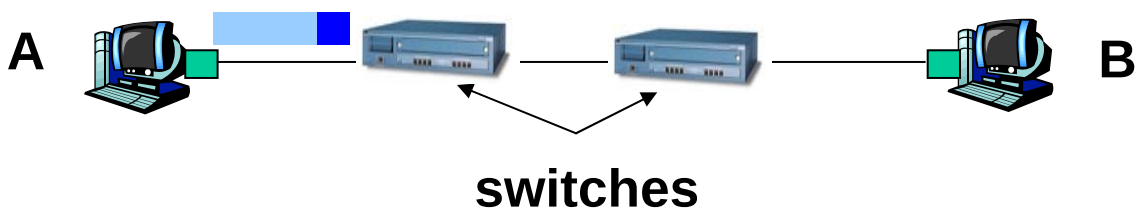

Cut-Through Switching

- Start transmitting as soon as possible
  - Inspect the frame header and do the look-up
  - If outgoing link is idle, start forwarding the frame
- Overlapping transmissions
  - Transmit the head of the packet via the outgoing link
  - … while still receiving the tail via the incoming link

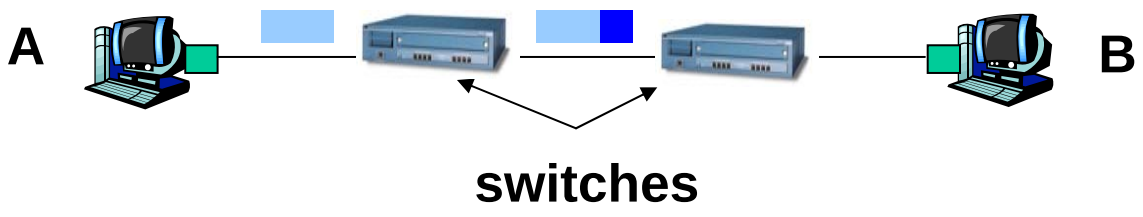

Goals for Today's Class

- Multiple-Access (Broadcast) Networks
  - Ethernet
- Network Connecting Devices
  - Repeaters and hubs
  - Bridges / LAN switches
  - Routers
- Network Categories
  - DAN, LAN, MAN, WAN

Network Layer: Routers

- Router – A device that forwards data packets from one local area network (LAN) or wide area network (WAN) to another. Based on routing tables and routing protocols, routers read the network address in each transmitted frame and make a decision on how to send it based on the most expedient route (traffic load, line costs, speed, bad lines, etc.).

[TechWeb Encyclopedia]

Network Layer: Routers

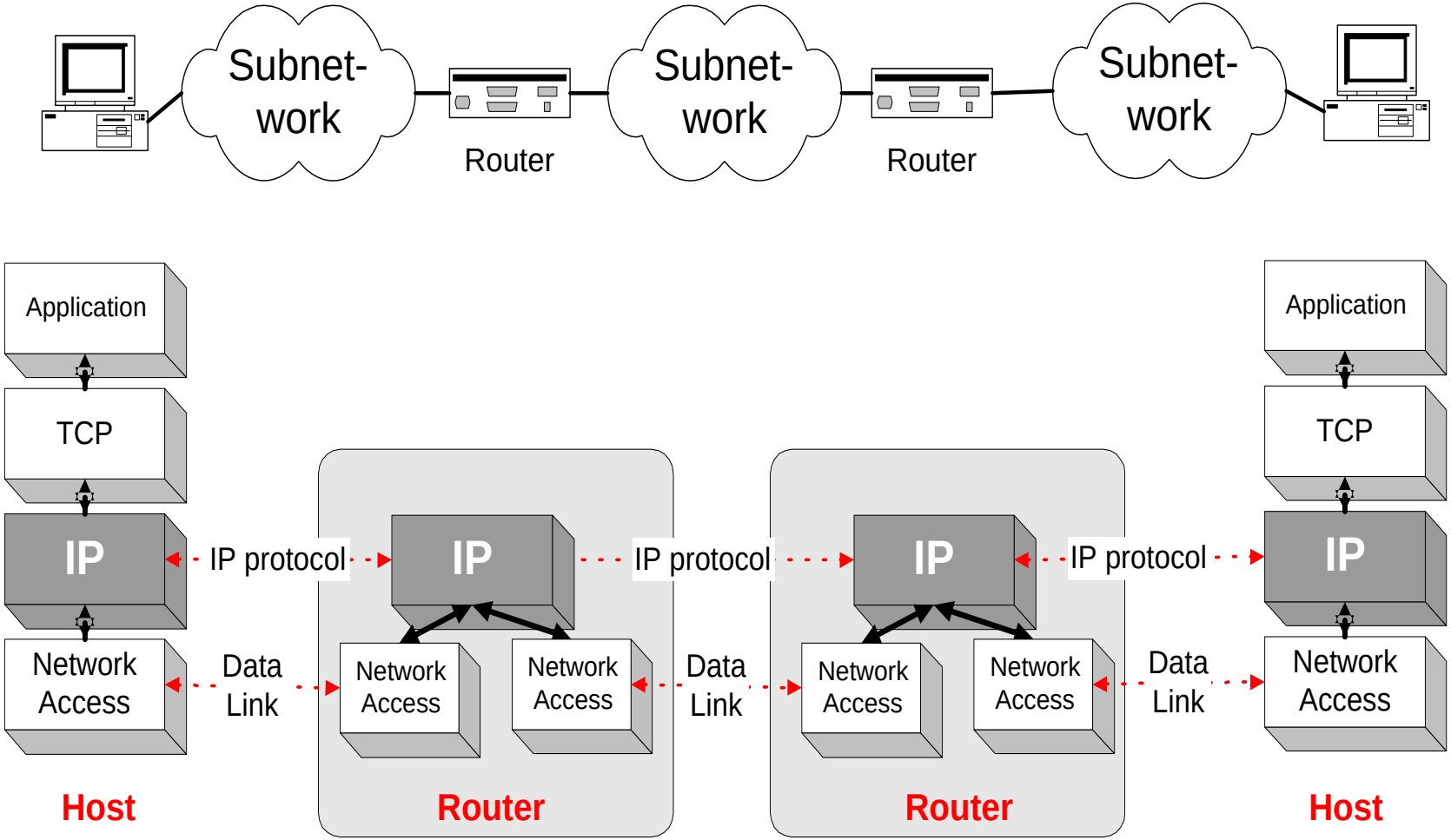

Bridges vs. Routers (1)

- Bridges work at the data link layer, whereas routers work at the network layer.

- Bridges are protocol independent; routers are protocol dependent.

- Bridges are faster than routers because they do not have to read the protocol to get routing information.

Bridges vs. Routers (2)

- An enterprise network (e.g., university network) with a large number of local area networks (LANs) can use routers or bridges
- Until early 1990s: most LANs connected by routers
- Since mid1990s: LAN switches replace most routers

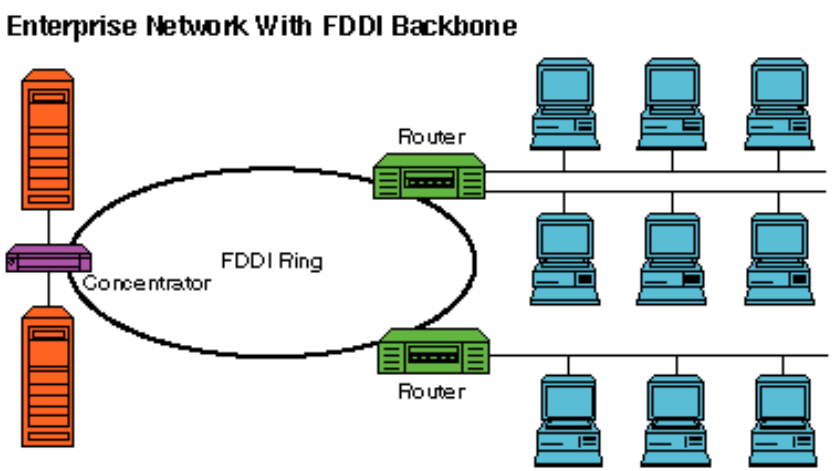

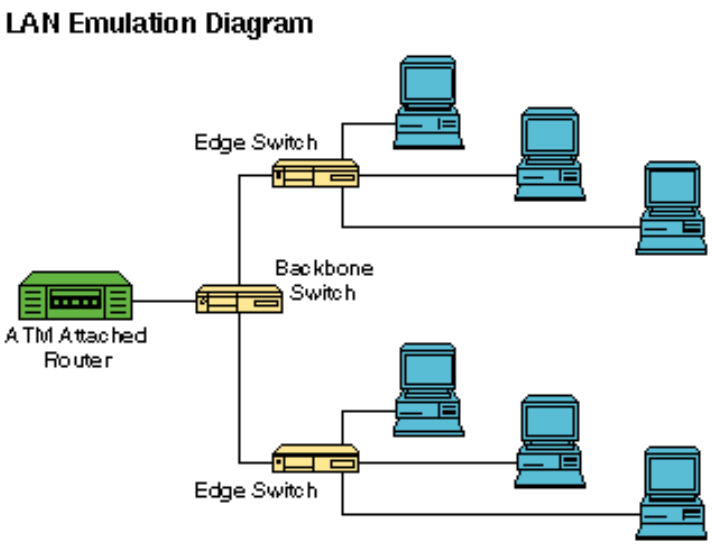

A Routed Enterprise Network

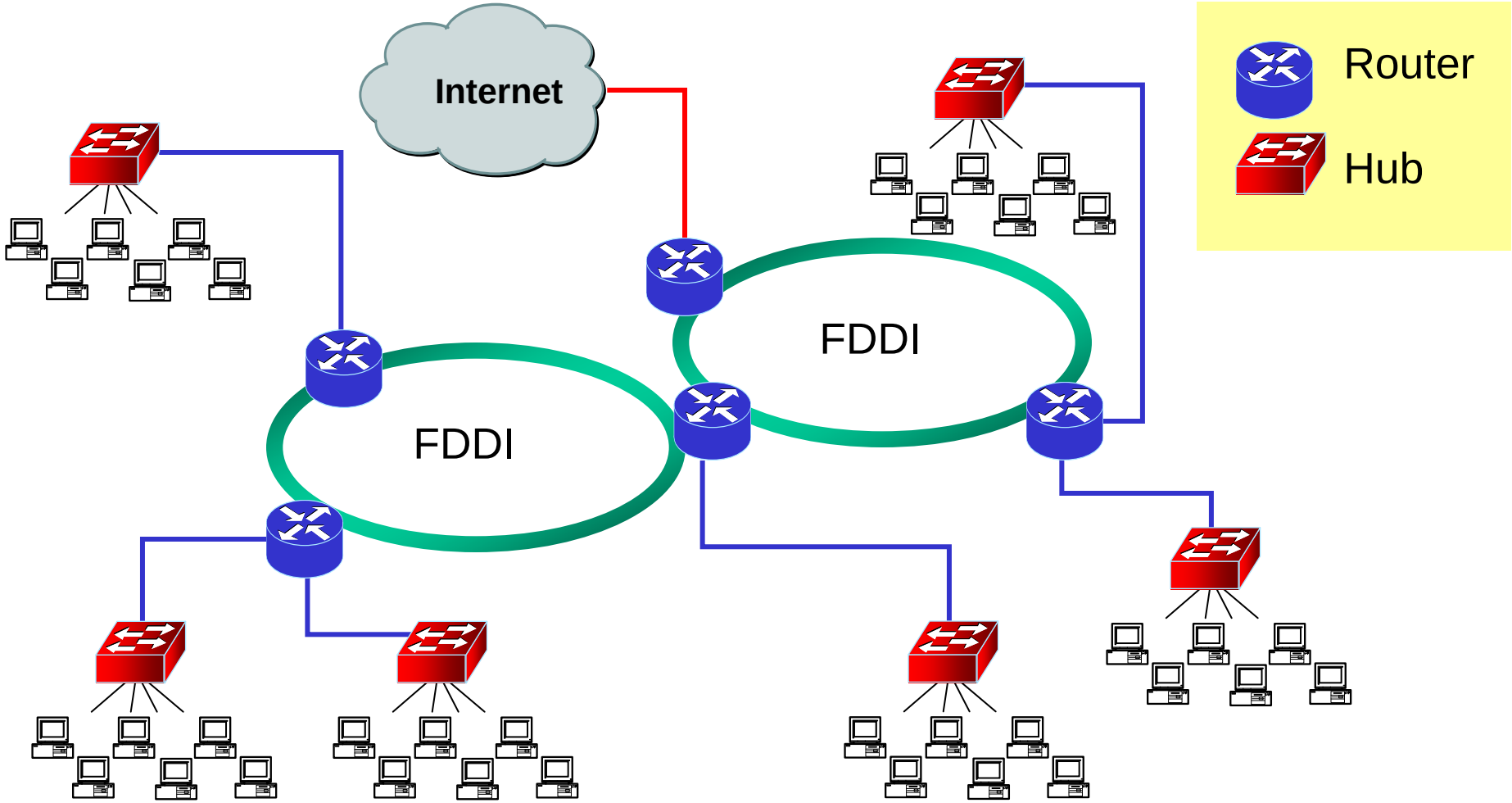

A Switched Enterprise Network

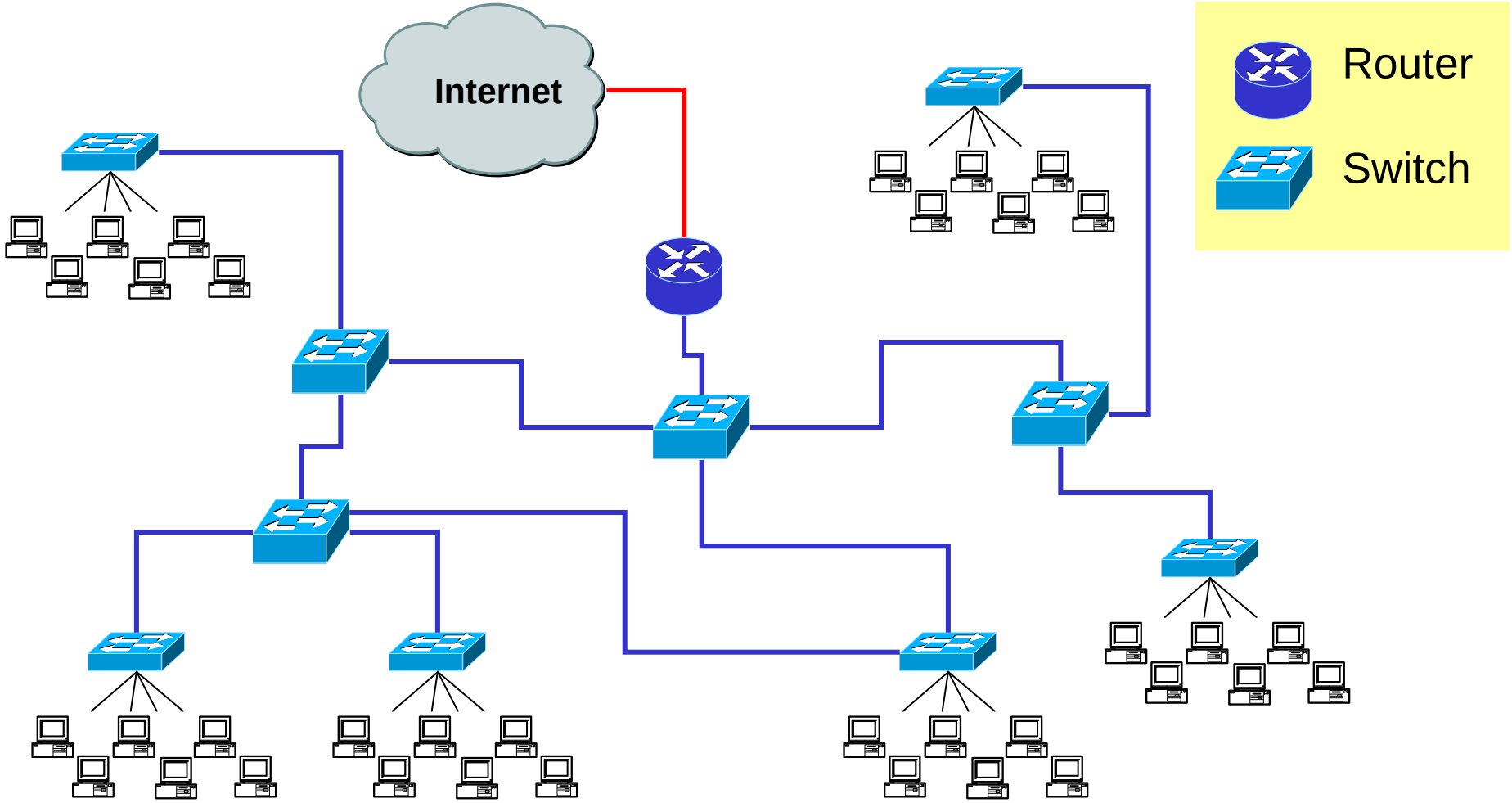

Bridges vs. Routers (3)

Routers

- Each host's IP address must be configured
- If network is reconfigured, IP addresses may need to be reassigned
- Routing done via protocols (RIP or OSPF)
- Each router manipulates packet IP header (e.g., reduces TTL field)

Bridges

- MAC addresses are hardwired
- No network configuration needed
- No routing protocol needed (sort of)
  - **learning bridge algorithm**
  - **spanning tree algorithm**
- Bridges look up, but do not manipulate frames

Need for Routing

- What do bridges do if some LANs are reachable only in multiple hops ?
- What do bridges do if the path between two LANs is not unique ?

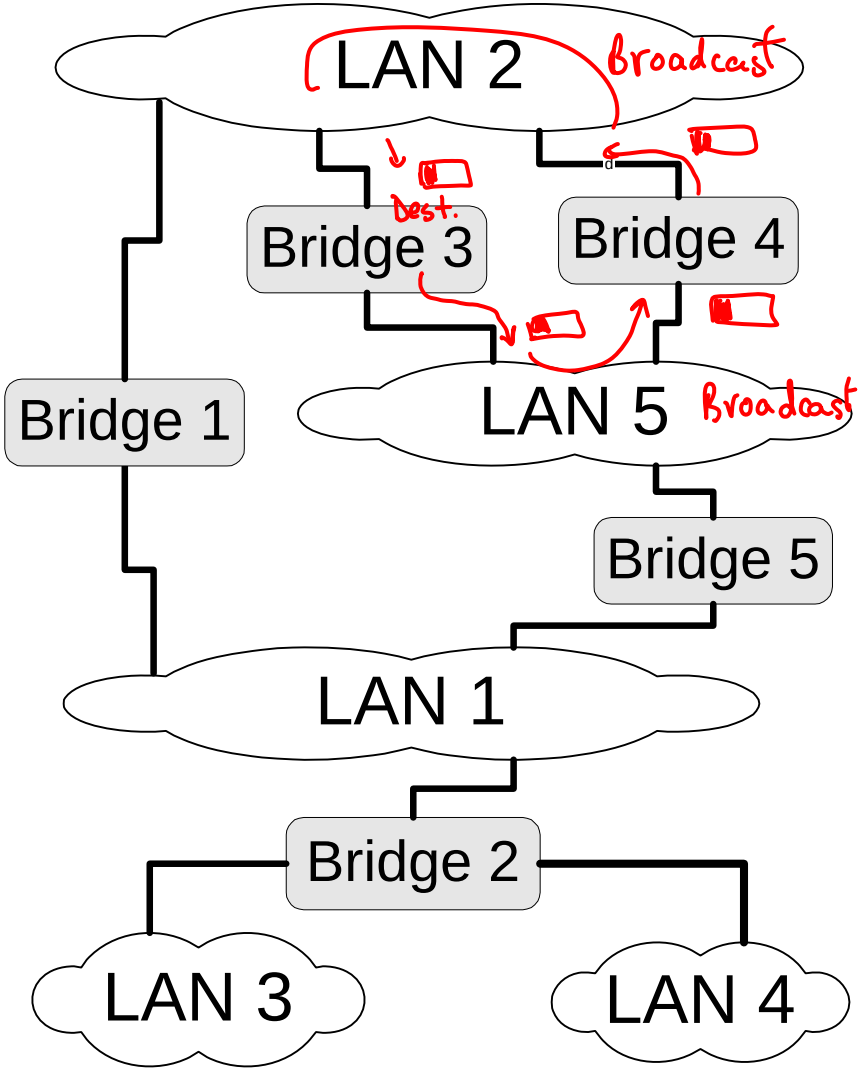

Transparent Bridges

- Not visible to end hosts
- Execute a spanning tree algorithm
- Two parts to transparent bridges:
  1. Learning & Forwarding
  2. Spanning Tree Algorithm

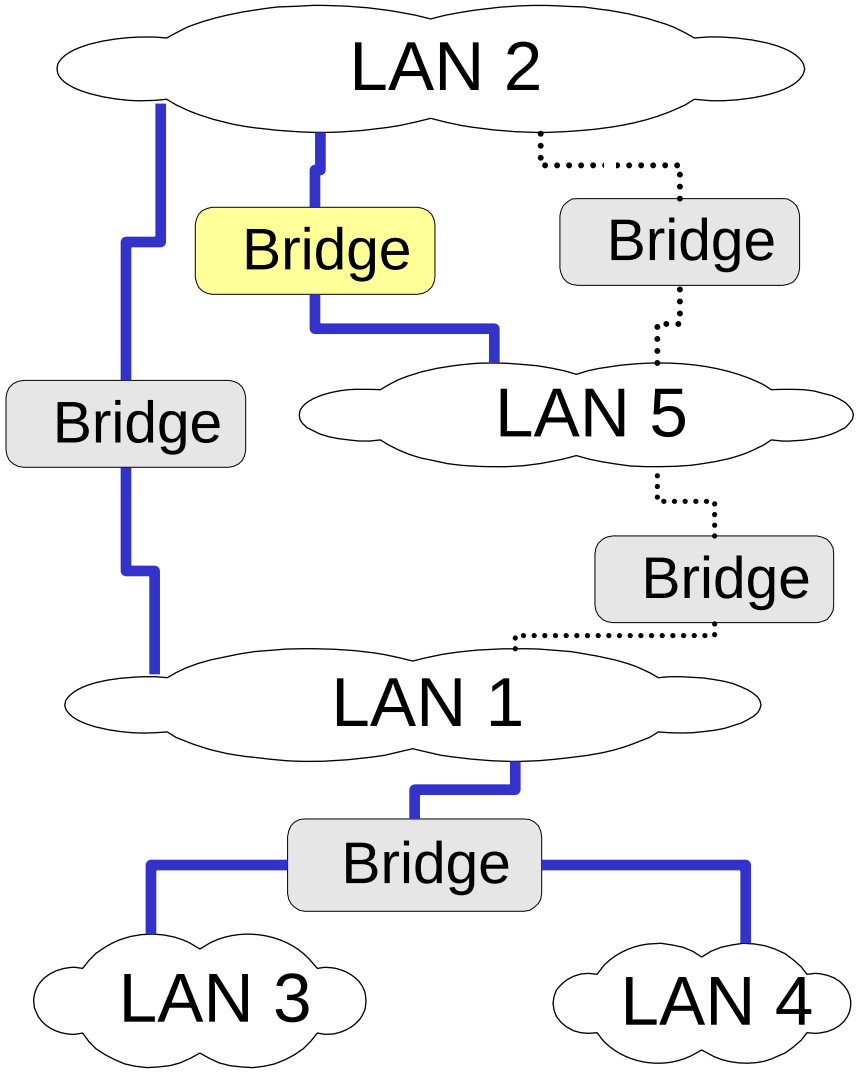

Transparent Bridges: Learning & Forwarding

- Switches forward frames selectively
  - Forward frames only on segments that need them
- Switch table
  - Maps destination MAC address to outgoing interface
  - Goal: construct the switch table automatically

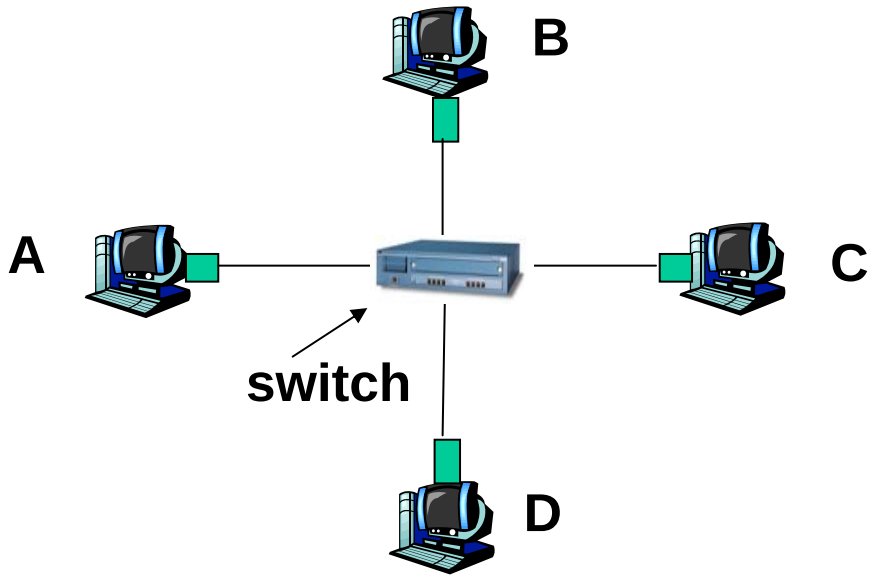

Transparent Bridges: Learning

- When a frame arrives
  - Inspect the *source* MAC address
  - Associate the address with the *incoming* interface
  - Store the mapping in the switch table
  - Use a time-to-live field to refresh the mapping (default 15s)

Switch learns how to reach A.

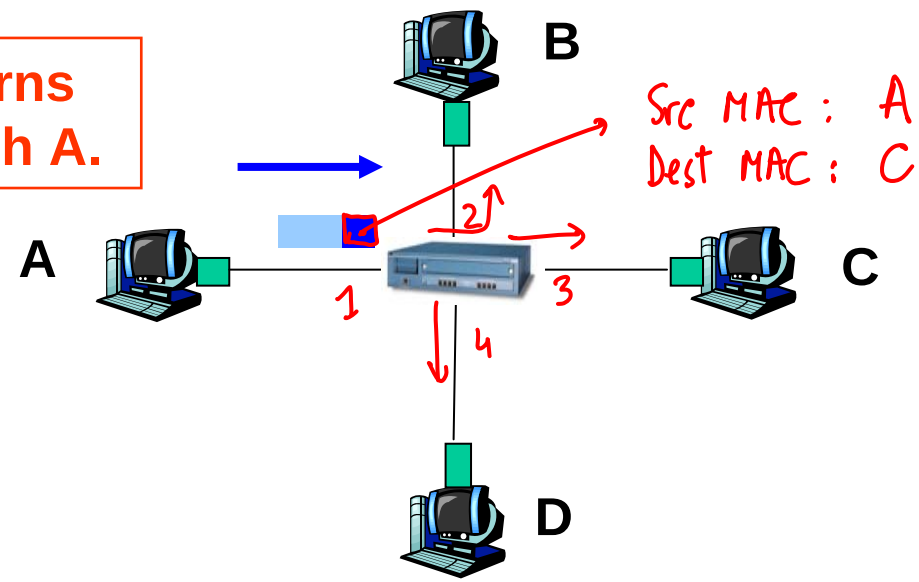

forwarding table

Dest	interface
A	1

Transparent Bridges: Forwarding (Miss)

- When frame arrives with unfamiliar destination
  - Forward the frame out all of the interfaces
  - … except for the one where the frame arrived
  - Hopefully, this case won't happen very often

When in doubt, shout!

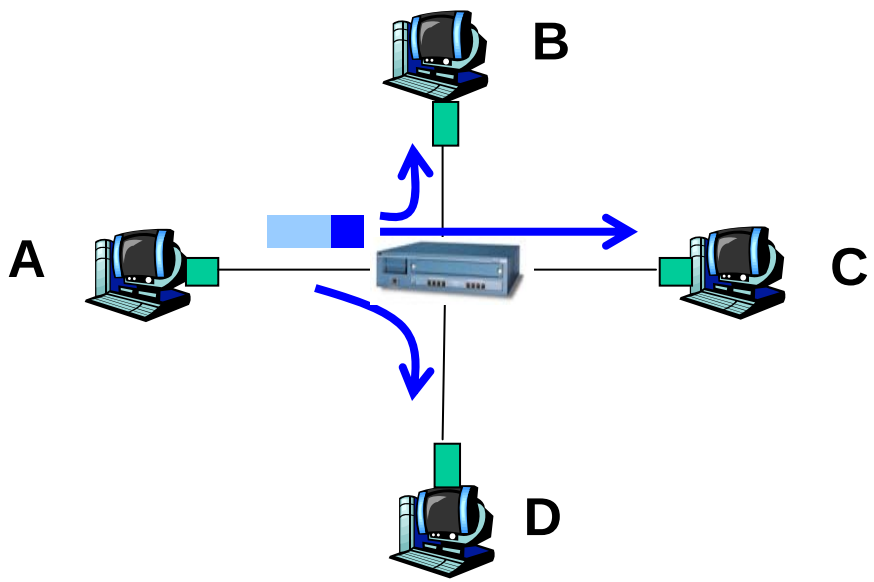

Transparent Bridges: Learning & Forwarding

When switch receives a frame:

```
Index switch table using MAC dest address
if entry found for destination then
{
    if dest on segment from which frame arrived then
        drop the frame
    else
        forward the frame on interface indicated
}
  else flood
```

forward on all but the interface on which the frame arrived

Example

- Consider the following packets:
  (Src=A, Dest=F), (Src=C, Dest=A), (Src=E, Dest=C)
- What have the bridges learned?

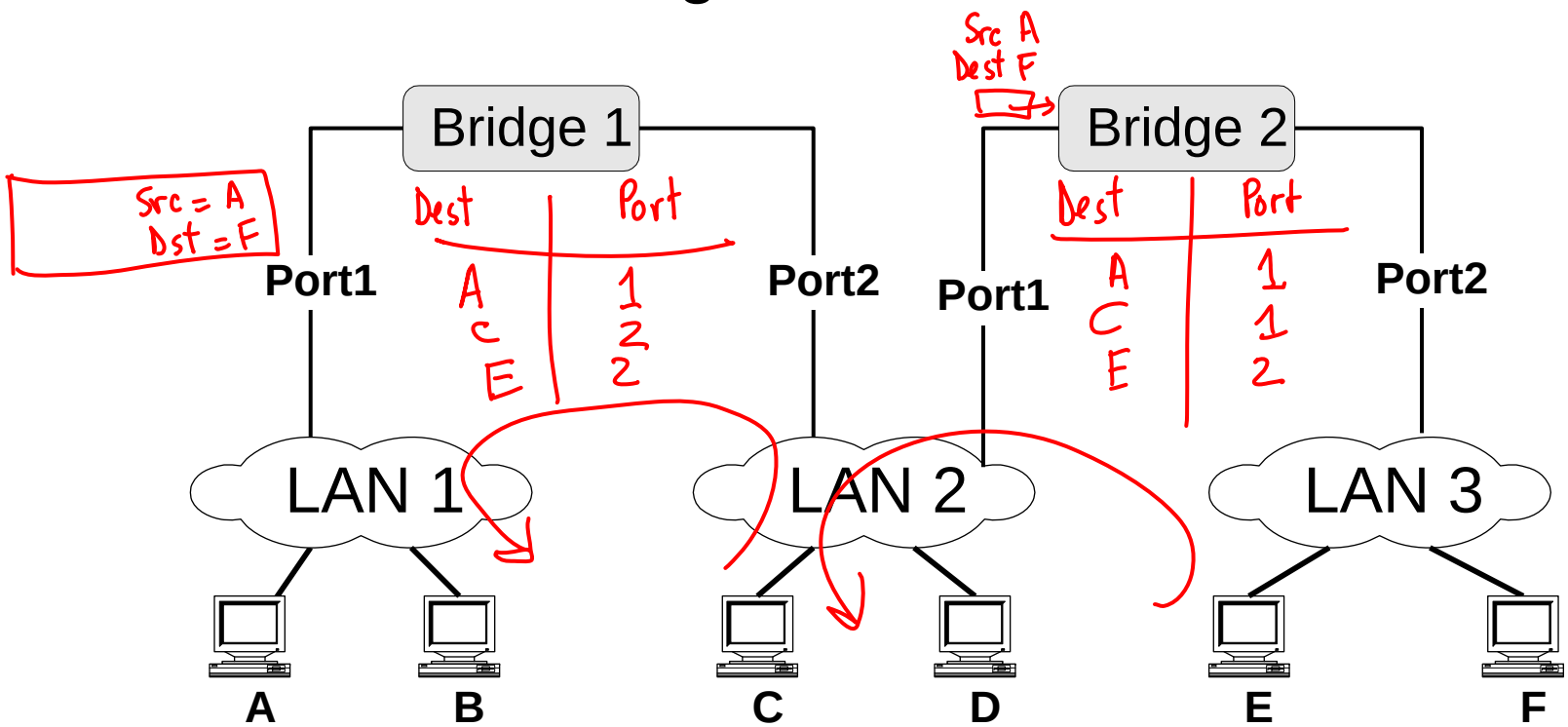

Danger of Loops

- Switches sometimes need to broadcast frames
  - Upon receiving a frame with an unfamiliar destination
  - Upon receiving a frame sent to the broadcast address
- Broadcasting is implemented by flooding
  - Transmitting frame out every interface
  - … except the one where the frame arrived
- Flooding can lead to forwarding loops
  - E.g., if the network contains a cycle of switches (reliability)

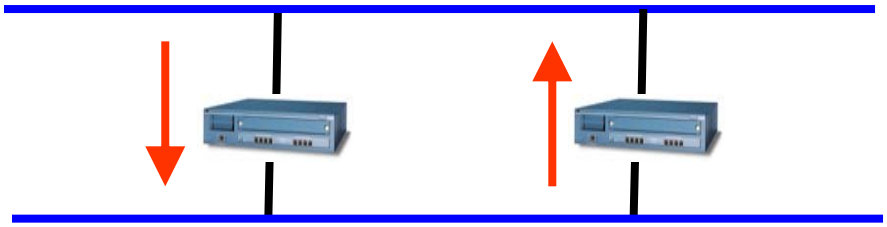

Solution: Spanning Trees

- Ensure the topology has no loops
  - Avoid using some of the links when flooding
  - … to avoid forming a loop
- Spanning tree
  - Sub-graph that covers all vertices but contains no cycles
  - Links not in the spanning tree do not forward frames

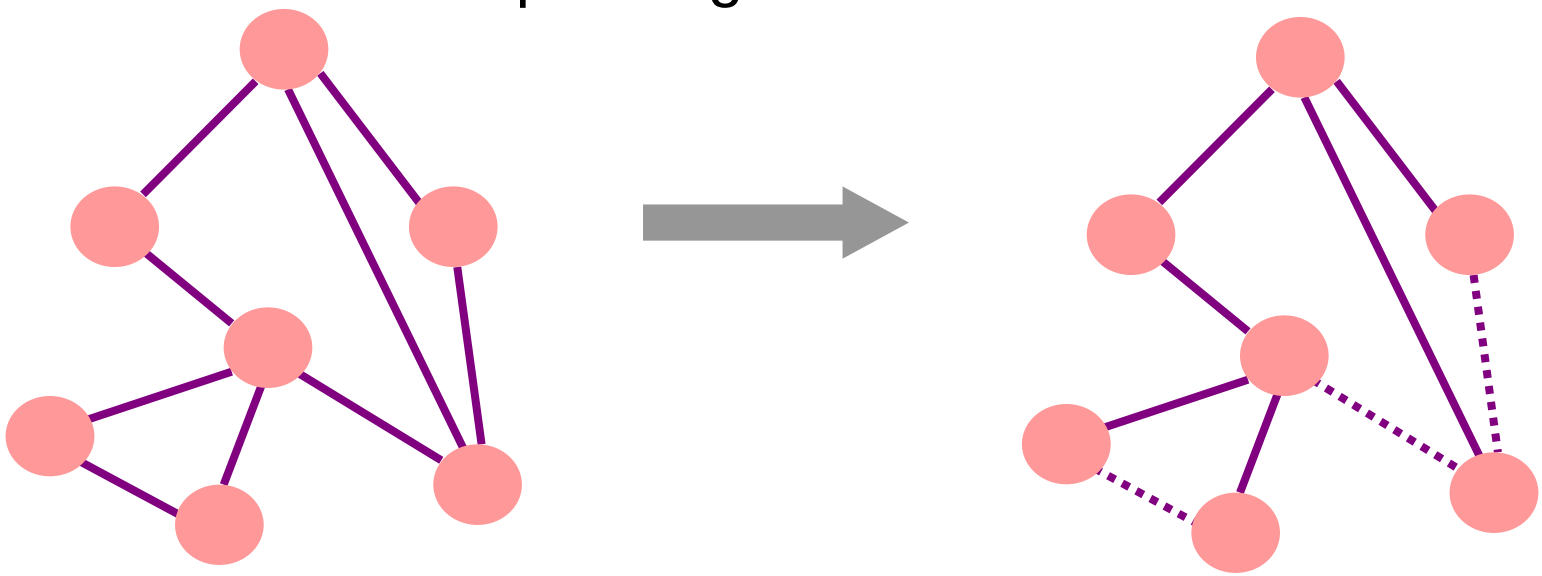

Constructing a Spanning Tree

- Need a distributed algorithm
  - Switches cooperate to build the spanning tree
  - … and adapt automatically when failures occur
- Key ingredients of the algorithm
  - Switches need to elect a "root" (smallest ID)
  - Each switch identifies if its interface is on the shortest path from the root
    - **And it exclude from the tree if not**
  - Messages (Y, d, X)
    - **From node X**
    - **Claiming Y is the root**
    - **And the distance to root is d**

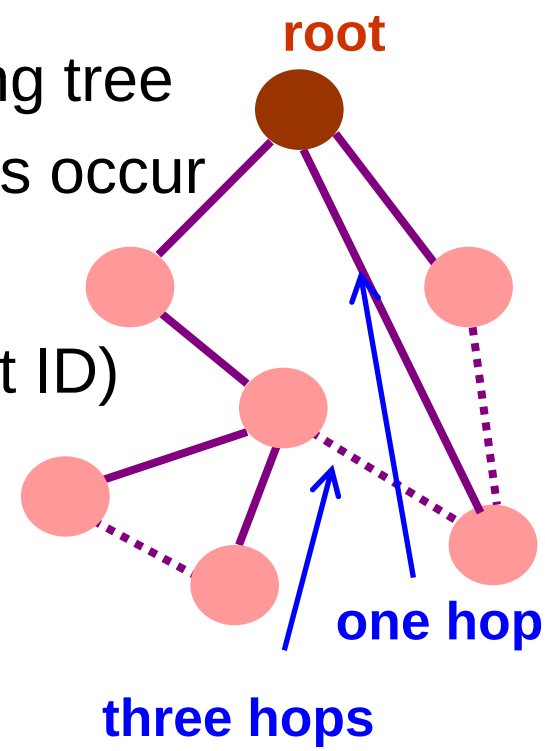

BPDU (Bridge Protocol Data Unit)

Steps in Spanning Tree Algorithm

- Initially, each switch thinks it is the root
  - Switch sends a message out every interface
  - … identifying itself as the root with distance 0
  - Example: switch X announces (X, 0, X)
- Switches update their view of the root
  - Upon receiving a message, check the root id
  - If the new id is smaller, start viewing that switch as root
- Switches compute their distance from the root
  - Add 1 to the distance received from a neighbor
  - Identify interfaces not on a shortest path to the root
  - … and exclude them from the spanning tree

Example From Switch #4's Viewpoint

- Switch #4 thinks it is the root
  - Sends (4, 0, 4) message to 2 and 7
- Then, switch #4 hears from #2
  - Receives (2, 0, 2) message from 2
  - … and thinks that #2 is the root
  - Stops generating BPDUs (forwards only)
- Then, switch #4 hears from #7
  - Receives (2, 1, 7) from 7
  - And realizes this is a longer path
  - So, prefers its own one-hop path
  - And removes 4-7 link from the tree (temporary view)

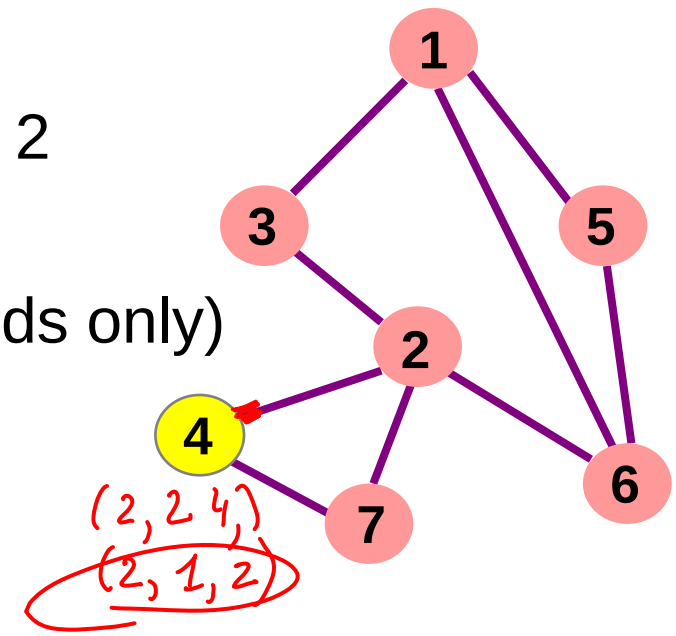

Example From Switch #4's Viewpoint

- Switch #2 hears about switch #1
  - Switch 2 hears (1, 1, 3) from 3
  - Switch 2 starts treating 1 as root
  - And sends (1, 2, 2) to neighbors
- Switch #4 hears from switch #2
  - Switch 4 starts treating 1 as root
  - And sends (1, 3, 4) to neighbors
- Switch #4 hears from switch #7
  - Switch 4 receives (1, 3, 7) from 7
  - And realizes this is a longer path
  - So, prefers its own three-hop path

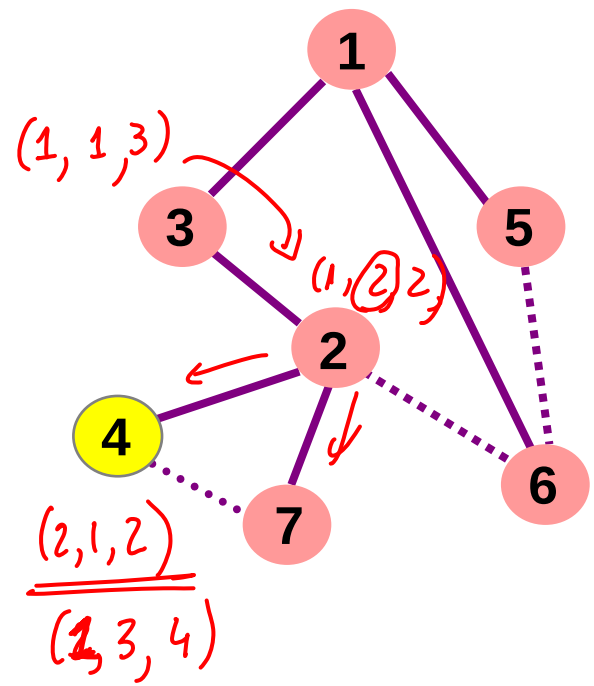

Robust Spanning Tree Algorithm

- Algorithm must react to failures
  - Failure of the root node
    - Need to elect a new root, with the next lowest identifier
  - Failure of other switches and links
    - Need to recompute the spanning tree
- Root switch continues sending messages
  - Periodically reannouncing itself as the root (1, 0, 1)
    - every 2s by default
  - Other switches continue forwarding messages
- Detecting failures through timeout (soft state!)
  - Switch waits to hear from others
  - Eventually times out and claims to be the root

See Section 3.2.2 in the textbook for details and another example

Comparing Hubs, Switches, Routers

	Hub/ Repeater	Bridge/ Switch	Router
Traffic isolation	no	yes	yes
Plug and Play	yes	yes	no
Efficient routing	no	no	yes
Cut through	yes	yes	no

Transport Layer: Gateways

- Gateway – (1) A computer that performs protocol conversion between different types of networks or applications. For example, a gateway can convert a TCP/IP packet to a NetWare IPX packet and vice versa, or from AppleTalk to DECnet, from SNA to AppleTalk and so on.

[TechWeb Encyclopedia]

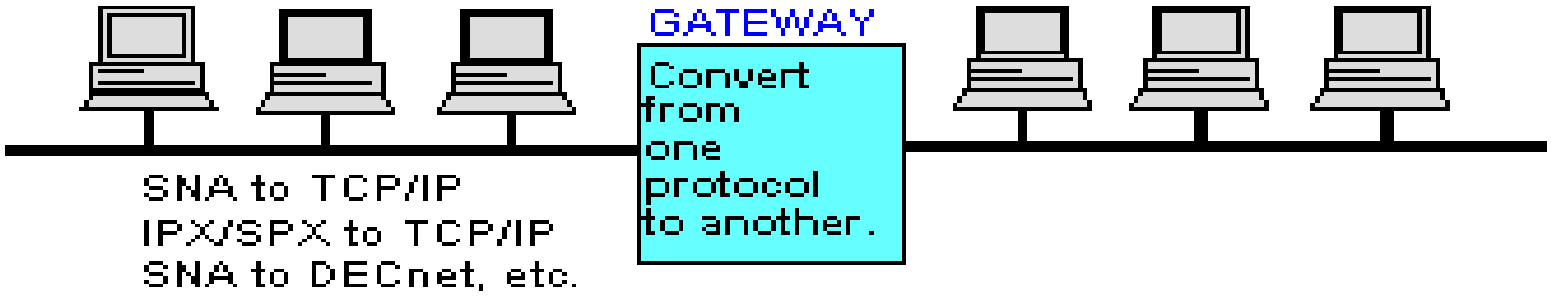

Network Categories

Network Categories

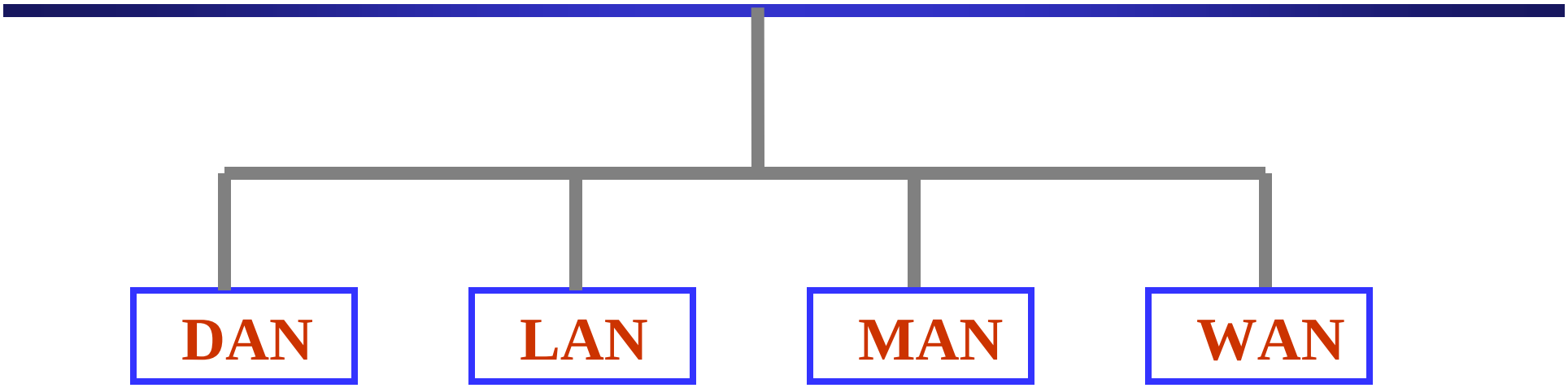

1. **DAN – Desk Area Network (DeskTop)**
2. **LAN – Local Area Network (Room, Building, Campus)**
3. **MAN – Metropolitan Area Network (City)**
4. **WAN – Wide Area Network (Country, Continent)**

DAN – Desk Area Network

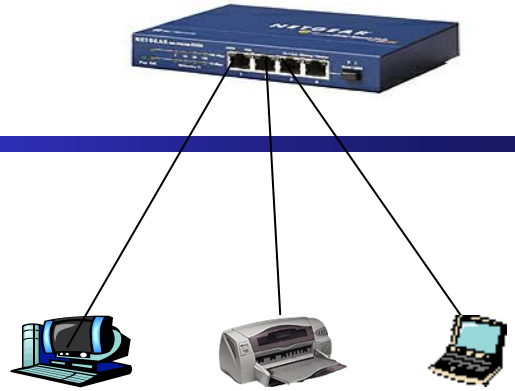

- Privately owned
- Small distance (desk, 1-4 meters)
- Share printers, files, Internet connections, etc.
- Speeds generally 10 Mbps or 100 Mbps
  - Mbps – megabits/sec – 1,000,000 bits per second
  - compare to MB/sec – megabytes/sec
- Star topology
- Low delay
- Very few errors

LAN – Local Area Network

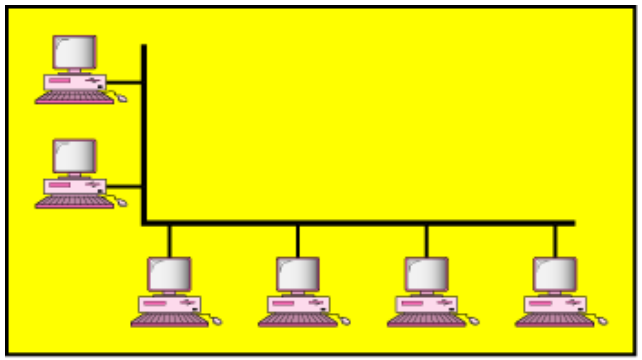

a. Single-building LAN

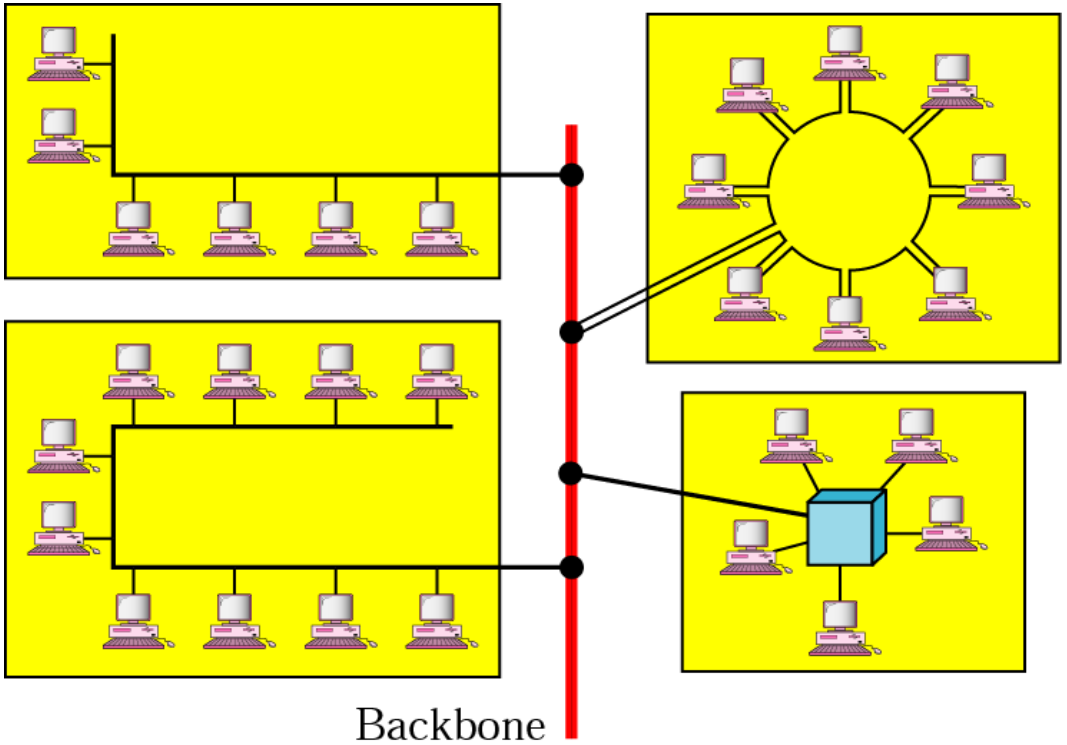

b. Multiple-building LAN

LAN – Local Area Network

- Privately owned
- Distance
  - Room [Meters]
  - Building [100 Meters]
  - Campus [Kilometers]
- Share printers, files, Internet connections, etc.
- May include hubs & switches
- Low Delay
- Very Few Errors

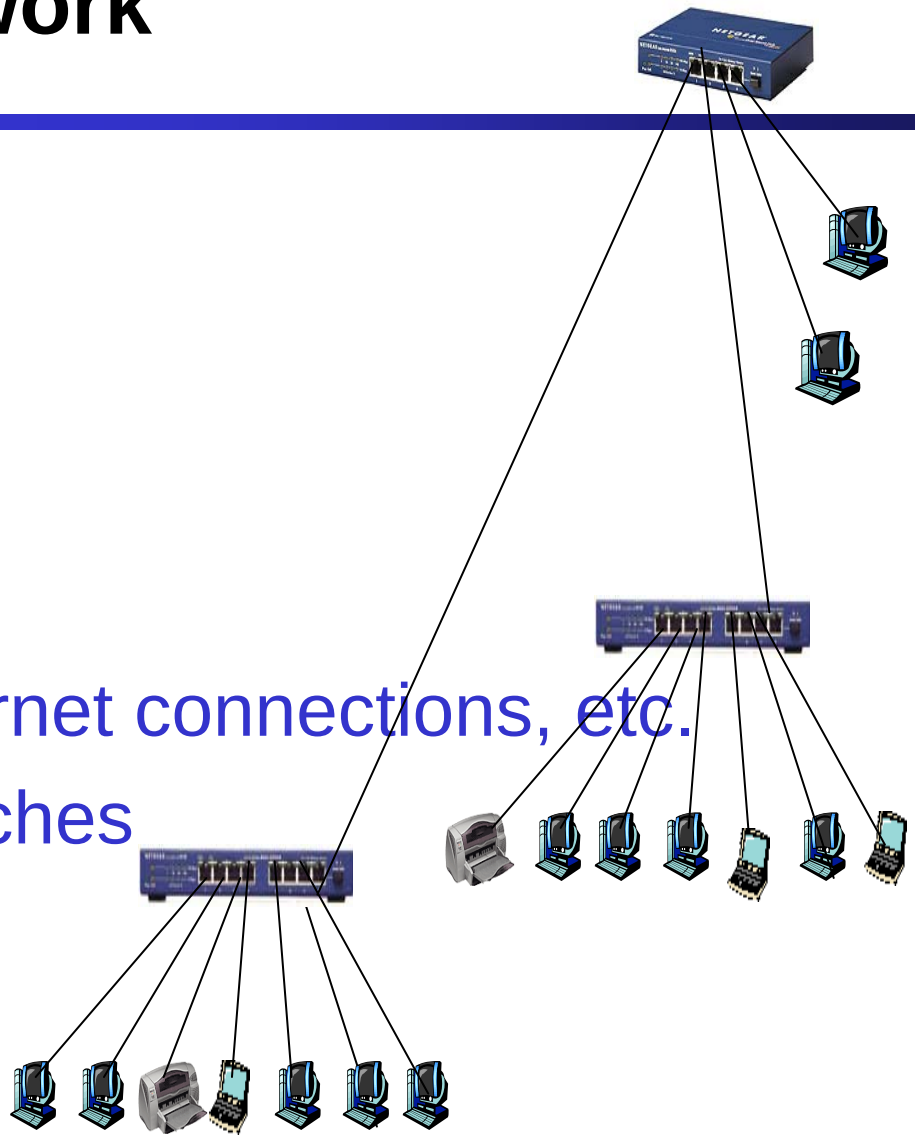

LAN Topologies (1)

- Star

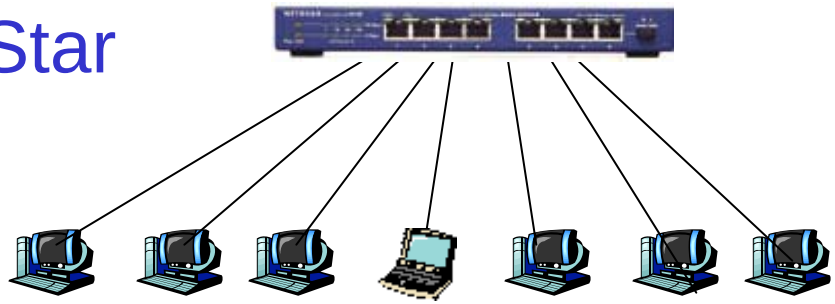

- Tree

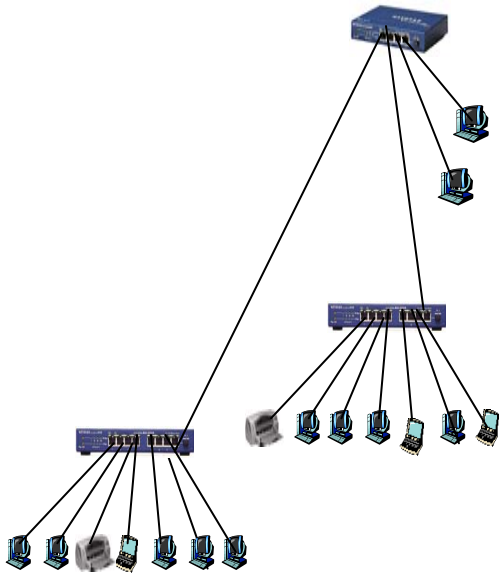

- Bus – Ethernet IEEE 802.3
  - speed 10Mbsp- Gbps

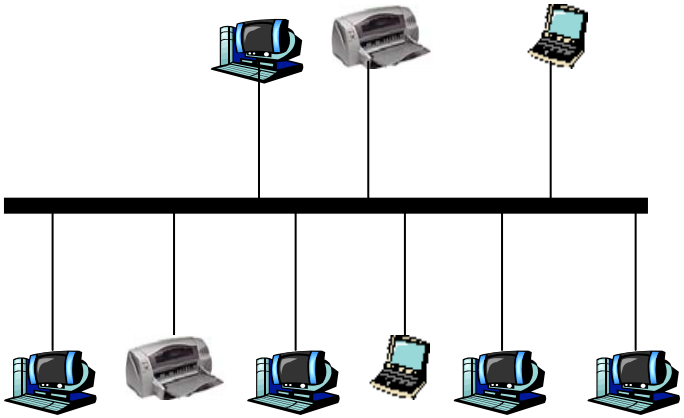

LAN Topologies (2)

- Ring – IBM IEEE 802.5
  - speed 4 – 26 Mbps

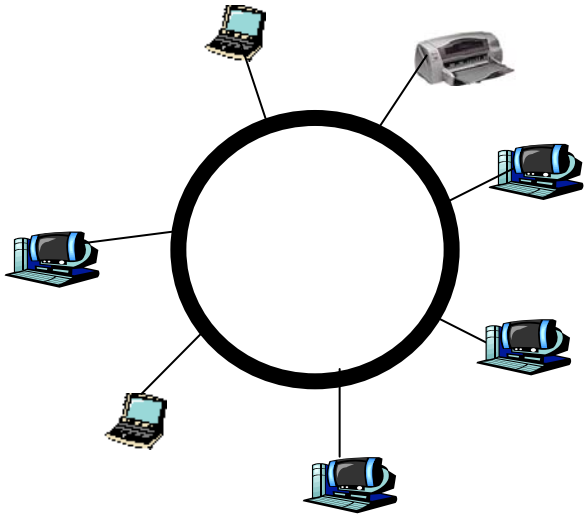

- Mesh (fully connected)

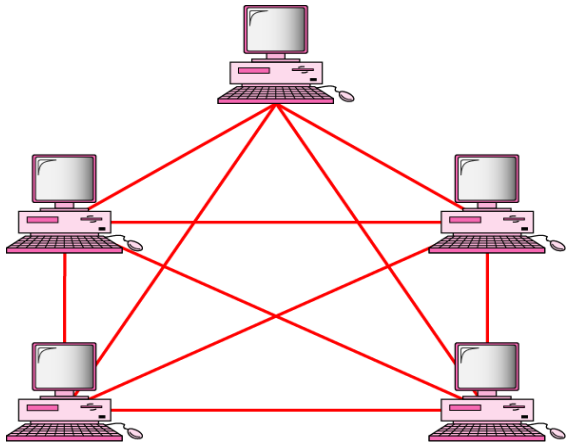

MAN – Metropolitan Area Network

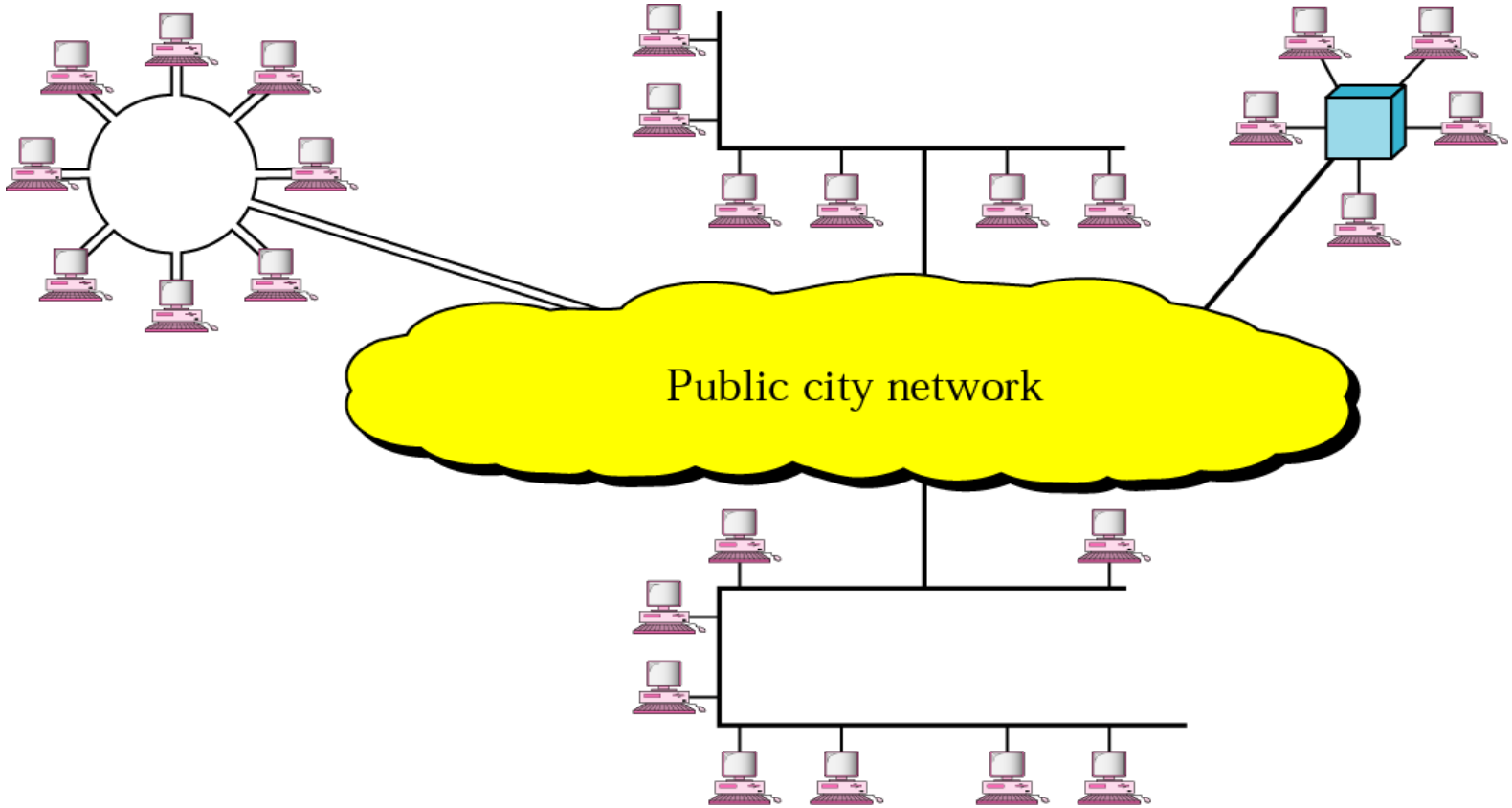

MAN – Metropolitan Area Network

- Distance
  - city (~ 10 Kilometers)
- One or two cables
- No switching elements
- Topology
  - DQDB – Distributed Queue Dual Bus for 2 cable configuration
  - DQDB is the standard for data communication (IEEE 802.6); network extends up to 20 miles (30km) long and operate at speeds of 34 to 155 Mbit/s.

MAN Topology

- DBDQ: IEEE 802.6 – two one-way buses
  - Packets travel from the Head and fall off
  - Travel Bus A if Computer to Right
  - Travel Bus B if Computer to Left
  - Optimize delivery

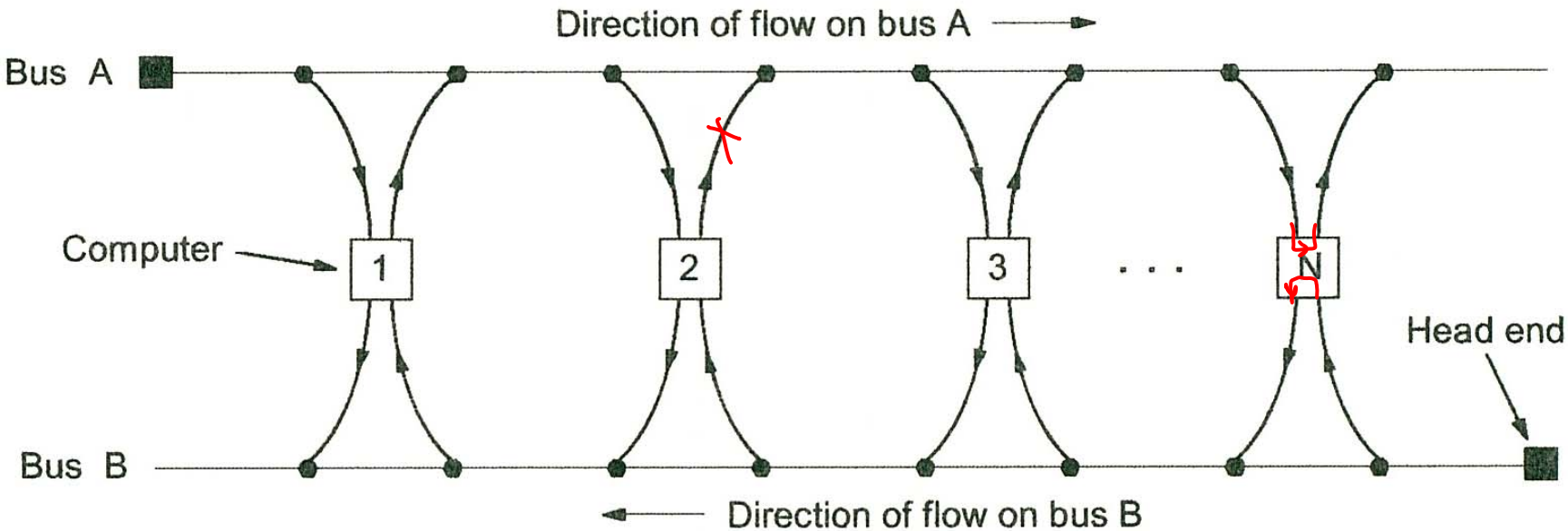

WAN – Wide Area Network

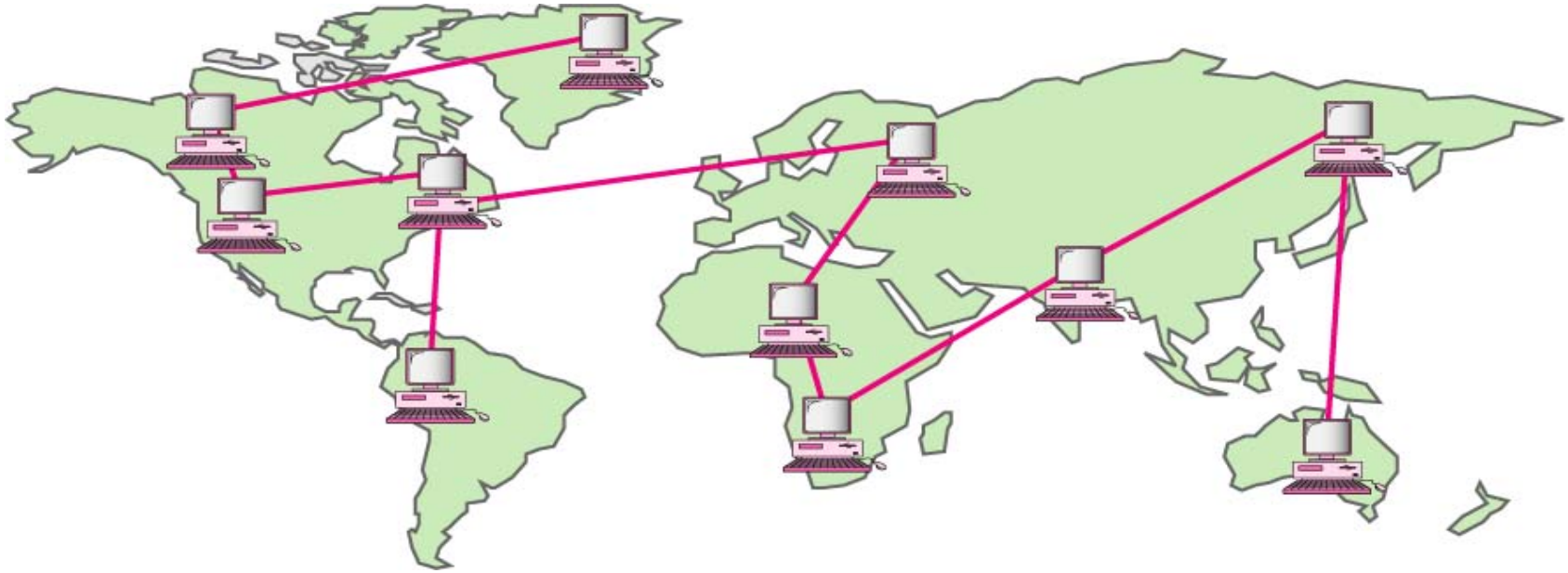

WAN – Wide Area Network

- Also called an *end system*
- Distance: country (~ 100 Km), continent (~ 1,000 Km)
- Routers: forward data from one LAN or WAN to another.

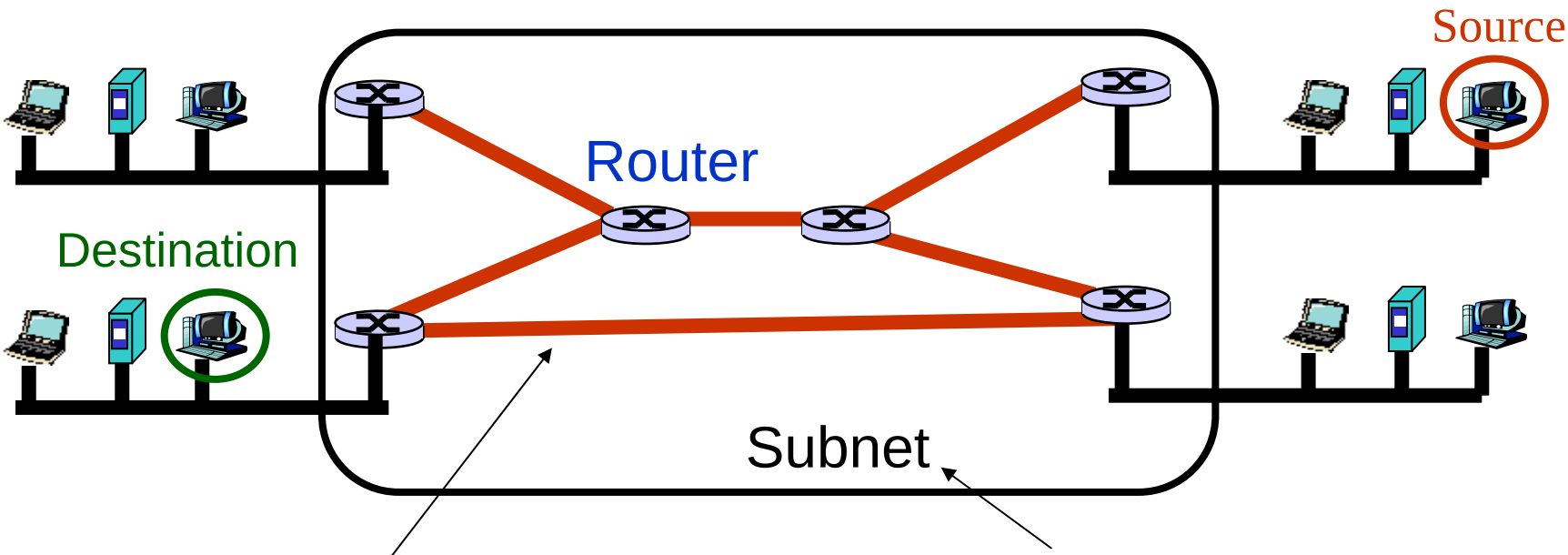

Transmission Line, Trunk, Circuit, Channel

Collection of routers and communication lines that move packets from the source to the destination

WAN Topologies

- Bus
- Star
- Tree
- Mesh
- Hybrid

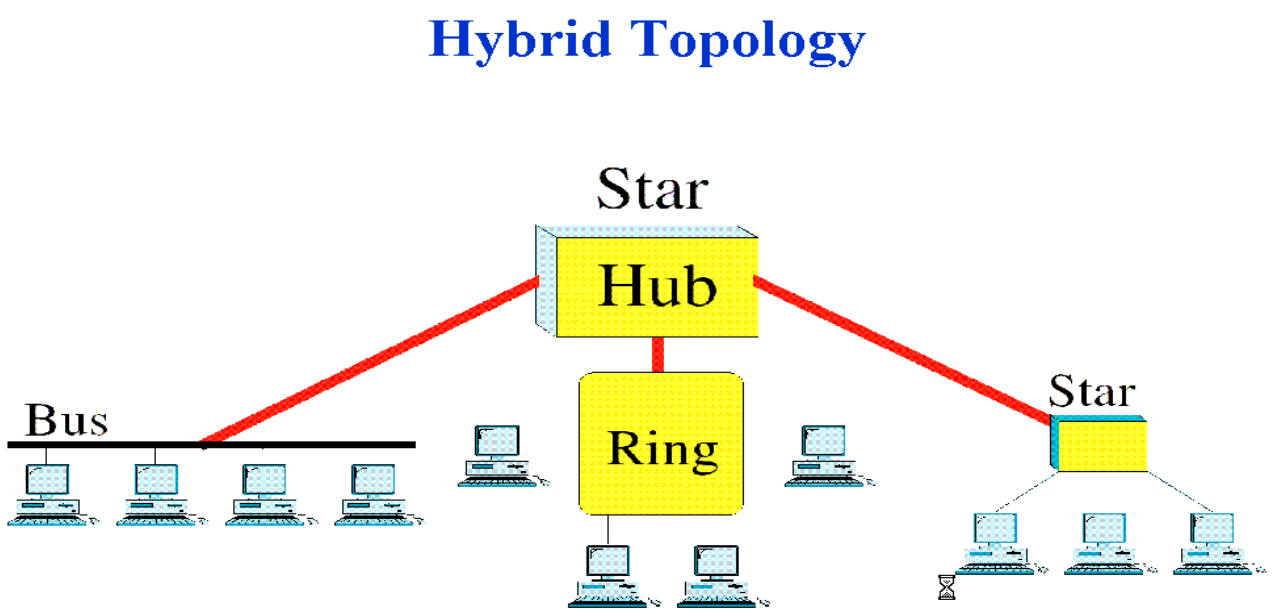

Summary

- Ethernet technology
- Shuttling data from one link to another
  - Bits, frames, packets, …
  - Repeaters/hubs, bridges/switches, routers, …
- Key ideas in switches
  - Cut-through switching
  - Self learning of the switch table
  - Spanning trees
- Network Categories
  - DAN, LAN, MAN, WAN