<u>Exercise 1</u> [The Geometry behind Diffuse Lighting]

The light in the scene below has a diffuse component only, and is oriented along the z-axis. The room is centered at the origin of the coordinate system, and its three walls are initially orthogonal to the three coordinate axis, as in the left of the image below. The scene uses smooth polygonal shading.

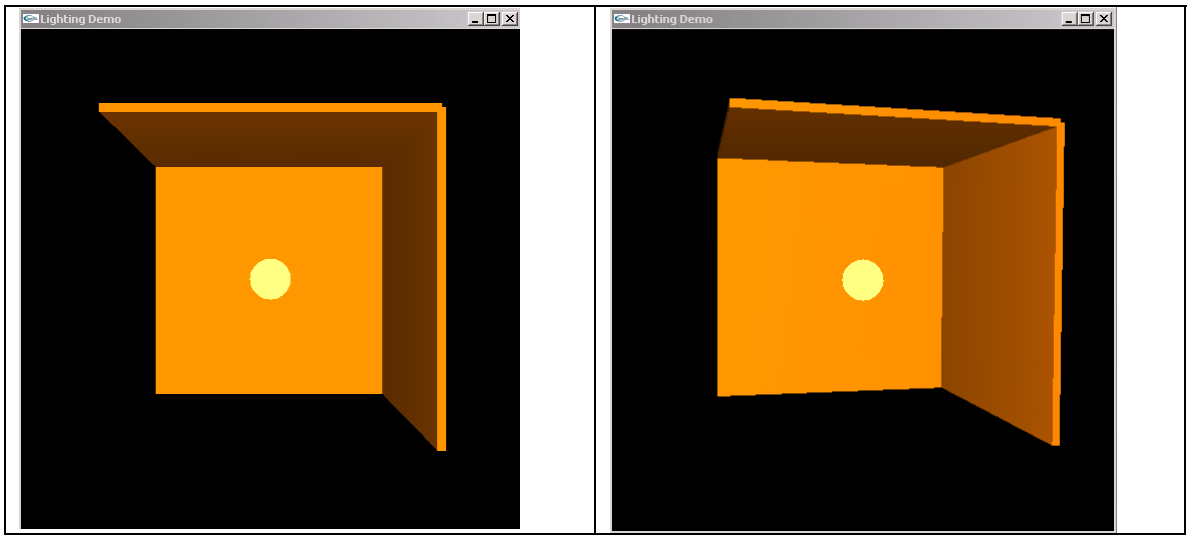

a) The room has been rotated clockwise about the x-axis by angle θ1, and counterclockwise about the y-axis by angle θ2, as in the right of the image above. Determine the relationship between θ1 and θ2, based on the intensity of the color on the three walls.

b) In the left image below, the corner between the back wall and the right wall is indistinguishable. What rotation has been applied to the scene relative to the original position? Specify the rotation angle and the rotation axis.

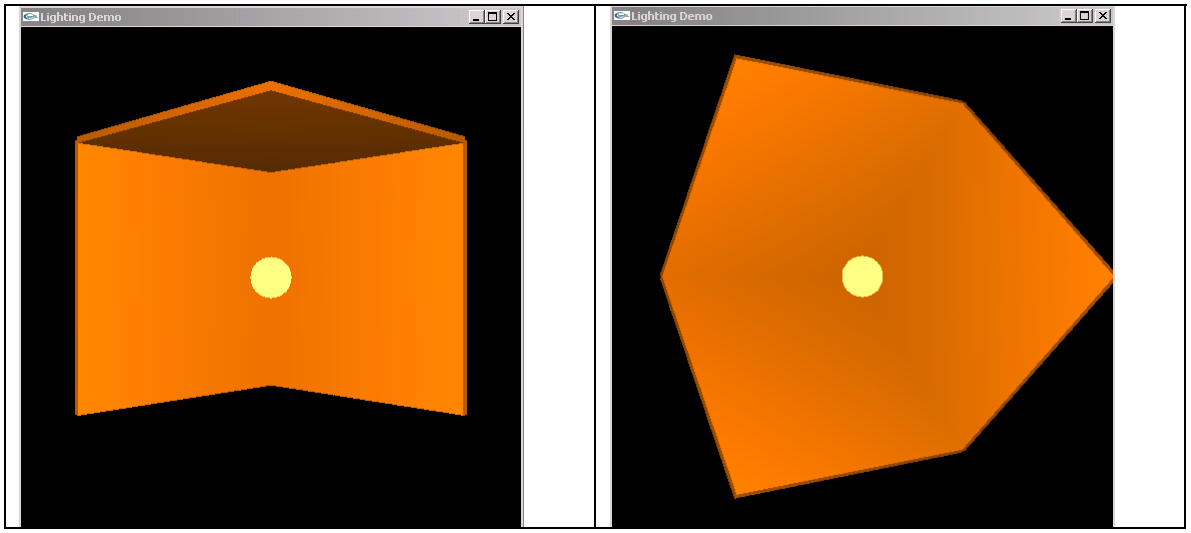

What about the image on the right?

<u>Exercise 2</u> [The Geometry behind Specular Lighting]

a) [**Warmup**] Imagine you have a specular surface positioned so that its center passes through the origin and lies in the X-Z plane. There is a flashlight positioned at (0.0, 4.0, 3.0) and is oriented so that it points at the origin. A cross-sectional diagram is shown below.

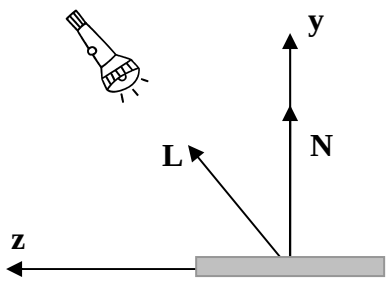

Suppose that you want to position a camera in the scene so that it is looking directly at the origin from a distance of 10 and is receiving maximum reflection? Where would you place the camera? Draw your answer first on the diagram and then give the (x, y, x) coordinates for the position of the camera.

b) [**Challenge**] When a ray of light projects off of a surface, the angle between the surface normal N and the direction of light L is equal to the angle between N and the direction of the reflection R.

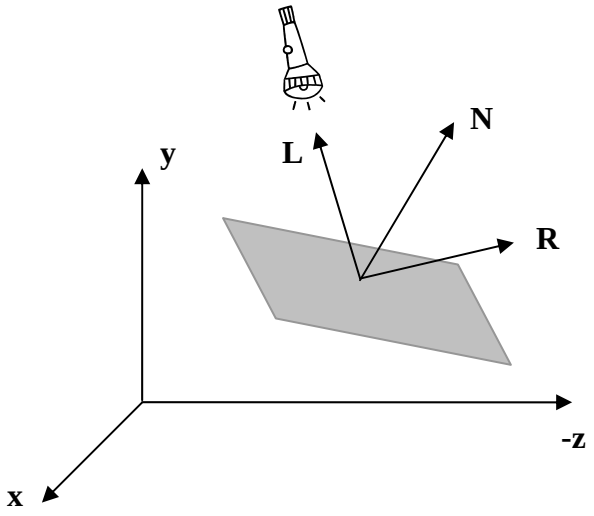

Notice that there are an infinite number of rays whose angle with N is the same as the angle between N and L. Of this infinite number of rays, the reflected light travels in the same plane as L and N. Derive a formula for R in terms of L and N. You can assume that L and N are unit vectors.

c) The light in the scene below has a white specular component only. The light is positioned at (-1, -1, 1) in the scene. The images below show two snapshots of the scene from different viewpoints. Give a vector indicating the direction of the viewer that sees the brightest spot in the center (0, 0, -2) of the back wall.